swatten
Powered by Sieyuan

User Manual

SiH-(5kW-10kW)-TH

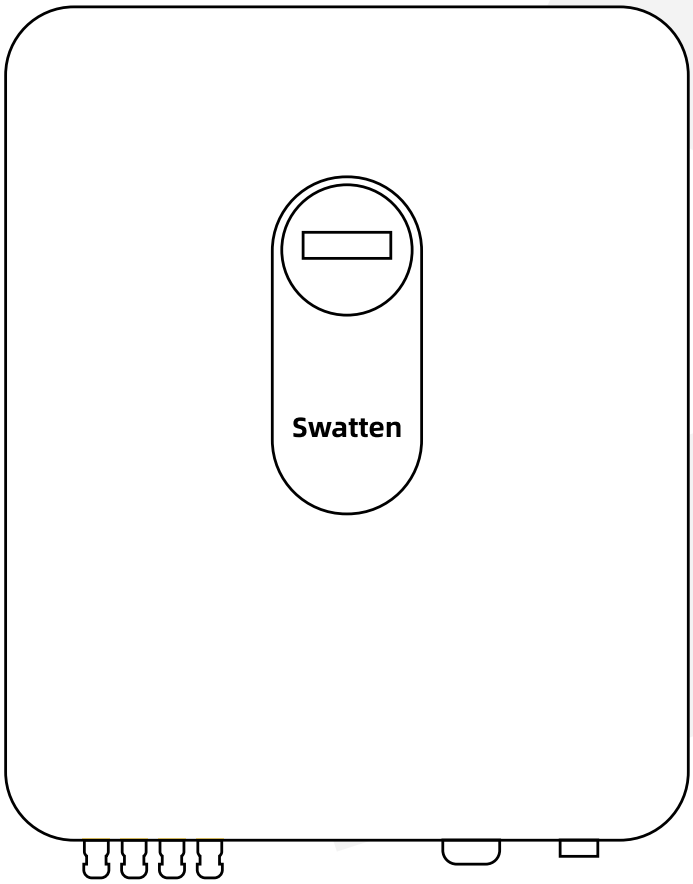

Shanghai Sieyuan Watten Technology Co., Ltd.
Powered by Sieyuan Electricity Co., Ltd.

www.swatten.com

All Rights Reserved

- **All Rights Reserved**

  No part of this document can be reproduced in any form or by any means without the prior written permission of Shanghai Sieyuan Watten Technology Co., Ltd.(hereinafter "Swatten").

- **Trademarks**

  Swatten and other Swatten trademarks used in this manual are owned by Swatten.

  All other trademarks or registered trademarks mentioned in this manual are owned by their respective owners.

- **Software Licenses**

➢ It is prohibited to use data contained in firmware or software developed by Swatten, in part or in full, for commercial purposes by any means.

➢ It is prohibited to perform reverse engineering, cracking, or any other operations that compromise the original program design of the software developed by Swatten.

Shanghai Sieyuan Watten Technology Co., Ltd.

Address: No. 3399 Huaning Rd.
Minhang District,
Shanghai 201100
P. R. China

Website: https://www.swatten.com

About This Manual

The manual primarily encompasses product information, along with installation, operation, and maintenance guidelines.

It will refer to the device as the "inverter" unless otherwise specified.

- Target Audience

  This manual is intended for professional technicians who have responsibilities for the installation, operation, and maintenance of inverters, as well as users who need to check inverter parameters.

  Installation Requirements:

  The installation of the inverter should only be carried out by professional technicians who meet the following requirements

- Possess knowledge of electronics, electrical wiring, and mechanical expertise, and be familiar with electrical and mechanical schematics.
- Have received professional training related to the installation and commissioning of electrical equipment.
- Capable of promptly responding to hazards or emergencies that may arise during the installation and commissioning process.
- Familiar with local standards and relevant safety regulations pertaining to electrical systems.
- Thoroughly read this manual and understand the safety instructions associated with the operations.
- How to Use This Manual
- Please carefully read this manual before utilizing the product and store it in a readily accessible location.
- All content, images, trademarks, and symbols in this manual are the property of Swatten. No part of this document may be reproduced by individuals not employed by Swatten without written authorization.
- The contents of this manual may be periodically updated or revised, and the specifications of the actual product purchased should take precedence.

- **Symbols**

  This manual incorporates crucial safety instructions that are emphasized using specific symbols. These symbols are employed to ensure the safety of individuals and property during product usage or to assist in maximizing product performance efficiently..

  It is essential to thoroughly comprehend the significance of the warning symbols to enhance your utilization of the manual.

DANGER

Indicates the presence of high-risk potential hazards that, if not avoided, could result in severe injury or even death.

WARNING

Indicates the presence of moderate-risk potential hazards that, if not avoided, could result in serious injury or even death.

CAUTION

Indicates the presence of low-risk potential hazards that, if not avoided, may lead to minor or moderate injury.

NOTICE

Indicates potential risks that, if not avoided, may result in device malfunctions or financial losses.

The "NOTE" designation is used to indicate supplementary information, emphasized content, or helpful tips that can assist you, such as problem-solving techniques or time-saving suggestions.

Change History

Changes between document issues are cumulative, meaning that each subsequent document issue includes all the changes made in earlier issues.

Issue 1 (2023-06-08)

This issue is the first official release.

Issue 2 (2024-09-30)

Second edition released.

Contents

1 Safety Instructions....1
1.1 Unpacking and Inspection....1
1.2 Installation Safety....2
1.3 Electrical Connection Safety....2
1.4 Operation Safety....3
1.5 Maintenance Safety....3
1.6 Disposal Safety....4
2 Product Description....5
2.1 System Introduction....5
2.2 Product Introduction....5
2.3 Symbols on the Product....7
2.4 LED Panel....8
2.5 DC Switch....9
2.6 PV Energy Storage System (PV ESS)....9
2.6.1 PV Energy Storage System (PV ESS)....9
2.6.2 Declaration For EPS Function....10
2.6.3 Energy Management....11
2.7 Retrofitting the Existing PV system....12
3 Function Description....15
3.1 Safety Function....15
3.1.1 Protection....15
3.1.2 Earth Fault Alarm....15
3.2 Energy Conversion and Management....15
3.2.1 Power Derating....15
3.2.2 Regular Operational Voltage Range....15
3.2.3 Regular Operational Frequency Range....16
3.2.4 Reactive Power Regulation....16
3.3 Communication and Configuration....16
3.4 Battery Management....16
3.4.1 Charge Management....16
3.4.2 Discharge Management....17
4 Unpacking and Storage....18
4.1 Unpacking and Inspection....18
4.2 Scope of Delivery....19
4.3 Inverter Storage....19
5 Mechanical Mounting....21
5.1 Safety during Mounting....21
5.2 Location Requirements....21
5.2.1 Environment Requirements....22
5.2.2 Carrier Requirements....22
5.2.3 Angle Requirements....23
5.2.4 Clearance Requirements....23

5.3 Installation Tools....24
5.4 Moving the Inverter....24
5.5 Installing the Inverter....25
6 Electrical Connection....27
6.1 Safety Instructions....27
6.2 Terminal Description....27
6.3 Electrical Connection Overview....29
6.4 EPS Wiring Diagram....30
6.5 External Protective Grounding Connection....32
6.5.1 External Protective Grounding Requirements....33
6.5.2 Connection Procedure....33
6.6 AC Cable Connection....34
6.6.1 AC Side Requirements....34
6.6.2 Connecting the AC Cable....35
6.7 Smart Meter Connection....36
6.8 DC Cable Connection (PV & Battery cable)....37
6.8.1 PV Input Configuration....37
6.8.2 Assembling the MC4 Connectors....39
6.8.3 Installing the PV and Battery Connector....40
6.9 Communication Connection....42
6.9.1 BAT-COM Connection....42
6.9.2 Meter Connection....42
6.9.3 COM Connection....42
6.9.4 WLAN- RS485 Connection....43
6.9.5 DRM-COM Connection....43
7 Commissioning....45
7.1 Inspection before Commissioning....45
7.2 Powering on the System....45
7.3 Stick Logger Installation....45
7.4 Download App....46
7.5 Registration....46
7.6 Create a Plant....46
7.7 Add a Logger....47
7.8 Network Configuration....47
7.9 Logger Status....49
7.9.1 Check Indicator light....49
7.10 Abnormal State Processing....49
8 System Decommissioning....51
8.1 Disconnecting the Inverter....51
8.1.1 Disconnecting the Inverter....51
8.1.2 Dismantling the Inverter....51
8.1.3 Disposal of the Inverter....51
8.2 Decommissioning the Battery....52
9 Troubleshooting and Maintenance....53

9.1 Troubleshooting.....53
9.2 Maintenance.....56
9.2.1 Maintenance Notices.....56
9.2.2 Routine Maintenance.....57
10 Appendix.....58
10.1 Technical Data.....58

1 Safety Instructions

When installing, commissioning, operating, and maintaining the product, it is crucial to strictly adhere to the labels on the product and the safety requirements outlined in the manual. Incorrect operations or procedures may result in the following:

- Injury or death to the operator or third parties.
- Damage to the product and other properties.

WARNING

- Avoid operating the product and cables (including but not limited to product movement, installation, operation, powering up, maintenance, and working at heights) under harsh weather conditions such as lightning, rain, snow, or wind of level 6 or stronger.
- In the event of a fire, evacuate the building or the area where the product is located and immediately contact the fire department. Under no circumstances should re-entry into the burning area be attempted.

NOTICE

- Ensure that the product and terminals are securely fastened using the specified torque and appropriate tools. Failure to do so may result in product damage, and any resulting damage will not be covered by the warranty.
- Familiarize with the correct usage of tools to prevent injury to individuals or damage to the device.
- Perform maintenance on the device with adequate knowledge of this manual and utilize proper tools.

  - The safety instructions provided in this manual are supplementary and may not encompass all precautions that should be followed. Always consider the actual on-site conditions when performing operations.
  - Swatten will not be held liable for any damages caused by the violation of general safety operation requirements, general safety standards, or any safety instructions stated in this manual.
  - When installing, operating, and maintaining the product, comply with local laws and regulations. The safety precautions provided in this manual serve as supplements to local laws and regulations.

1.1 Unpacking and Inspection

WARNING

Before decommissioning the device, carefully inspect all safety signs, warning labels, and nameplates to ensure they are in place and clearly visible. These signs and labels should not be removed or covered at any time.

NOTICE

Upon receiving the product, conduct a thorough inspection to verify the condition of the device's appearance and structural components. Additionally, compare the contents of the packaging with the ordered product to ensure consistency. If any issues arise during these inspections, refrain from installing the device and promptly reach out to your distributor. If the problem persists, contact Swatten for further assistance.

1.2 Installation Safety

DANGER

- Before installation, ensure that there is no electrical connection present.
- Prior to drilling, take precautions to avoid any water or electrical wiring within the wall.

CAUTION

Improper installation can result in personal injury!

- If the product supports hoisting for transportation using hoisting tools, it is strictly prohibited for anyone to remain under the product.
- When moving the product, take into account its weight and maintain balance to prevent tilting or falling.

NOTICE

Prior to operating the product, it is crucial to inspect and verify that the tools to be used have undergone regular maintenance.

1.3 Electrical Connection Safety

DANGER

Before making electrical connections, it is essential to ensure that the inverter is undamaged to prevent potential dangers!

Before electrical connections, confirm that the inverter switch and all switches connected to the inverter are set to the "OFF" position to avoid the risk of electric shock!

DANGER

The PV string generates a lethal high voltage when exposed to sunlight. Please observe the following safety precautions during electrical connections.

- Operators must wear appropriate personal protective equipment.
- Use a measuring instrument to verify that cables are voltage-free before touching DC cables.
- Adhere to all safety instructions provided in relevant documents concerning PV strings.

DANGER

There is a risk of high voltage inside the inverter that can be life-threatening. Please take note of the following precautions!

- Use specialized insulation tools during cable connections.
- Follow and strictly adhere to the warning labels on the product and the safety instructions.
- Respect all safety instructions stated in this manual and other relevant documents.

DANGER

Batteries deliver electrical power and can cause burns or fire hazards when short-circuited or incorrectly installed. Lethal voltages are present at the battery terminals and cables connected to the inverter. Avoid touching the cables and terminals to prevent severe injuries or death.

WARNING

- Damage to the product resulting from incorrect wiring is not covered by the warranty.
- Electrical connections should be performed by professionals.
- All cables used in the PV generation system must be securely attached, properly insulated, and adequately sized.

WARNING

Ensure to check the positive and negative polarity of the PV strings and connect the PV connectors to the corresponding terminals only after confirming the correct polarity. During the installation and operation of the inverter, prevent the positive or negative poles of PV strings from short-circuiting to the ground to avoid AC or DC short-circuits that could lead to equipment damage. Such damage is not covered by the warranty.

NOTICE

Comply with the safety instructions regarding PV strings and adhere to the regulations applicable to the local grid.

1.4 Operation Safety

DANGER

- Do not touch the enclosure of the inverter while it is running.
- It is strictly prohibited to plug or unplug any connectors on the inverter while it is running.
- Avoid contact with any terminals of the inverter while it is running to prevent electric shock.
- Do not disassemble any parts of the inverter while it is running, as it may result in electric shock.
- Refrain from touching any hot parts of the inverter, such as the heat sink, while it is running to avoid burns.
- If the inverter is equipped with a DC switch, do not operate it while the inverter is running to prevent device damage or personal injury.

1.5 Maintenance Safety

DANGER

There is a risk of inverter damage or personal injury resulting from incorrect service procedures!

- Prior to performing any service work, disconnect the grid-side AC circuit breaker and check the status of the inverter. If the inverter indicator is off, wait until nighttime before disconnecting the DC switch. If the inverter indicator is on, you can directly disconnect the DC switch.
- After the inverter has been powered off for at least 10 minutes, use a professional instrument to measure the voltage and current. Only when there is no voltage or current detected, and operators are wearing proper protective equipment, can they proceed with operating and maintaining the inverter.
- Even when the inverter is shut down, it may still retain heat and can cause burns. Therefore, it is essential to wear protective gloves when operating the inverter after it has cooled down.

DANGER

Touching the power grid or the contact points and terminals on the inverter connected to the power grid can result in electric shock!

- The power grid side may have voltage. Always use a standard voltmeter to ensure there is no voltage before touching.

CAUTION

To prevent misuse or accidents caused by unauthorized personnel, prominently display warning signs or designate safety warning areas around the product.

NOTICE

To avoid the risk of electric shock, refrain from performing any maintenance operations beyond those described in this manual. If necessary, contact your distributor first. If the issue persists, contact Swatten for maintenance. Failure to do so may result in losses that are not covered by the warranty.

1.6 Disposal Safety

WARNING

Please dispose of the product in accordance with the applicable local regulations and standards to prevent property losses or injuries

2 Product Description

2.1 System Introduction

The inverter is a transformerless 3-phase hybrid inverter that plays a crucial role in the power system. Its primary function is to convert the direct current power generated by PV modules or batteries into AC current that is compatible with the utility grid. The inverter enables the feed-in of AC current to the utility grid. It is suitable for use in both on-grid and off-grid PV systems.

One of the key features of the 3-phase hybrid inverters is the integration of an Energy Management System (EMS). This system allows for effective control and optimization of the energy flow within the system. By intelligently managing the energy, the inverter enhances the self-consumption of the system, maximizing the utilization of generated power.

WARNING

- Operate the inverter only with PV strings having class II protection (IEC 61730, application class A). Avoid grounding the positive or negative poles of the PV strings to prevent damage to the inverter.
- Warranty does not cover damages caused by faulty or damaged PV installations.
- Only use the inverter as described in this document; any other use is not permitted.
- During installation and operation, ensure that the positive and negative polarities of PV strings and batteries do not short-circuit to the ground to avoid equipment damage. Warranty does not cover damage resulting from such short-circuits.
- Avoid short-circuiting the EPS port during operation to prevent severe damage to the inverter or power distribution system. Such damage is not covered by the Swatten warranty.
- Do not connect any local load between the inverter and the AC circuit breaker.

NOTICE

- In a TT utility grid, ensure that the N line voltage to ground is 30V or below.
- For off-grid applications, the utility grid must be a TN system.
- The system is not suitable for powering life-sustaining medical devices, and it does not guarantee EPS power in all situations.
- The inverter is designed for the specific scenarios described in this manual.

2.2 Product Introduction

Model Description

The model description is follows (take SiH-10kW-TH as an example):

SiH: Swatten Hybrid inverter

10kW: Power level

TH: Three phase, High voltage

Appearance

The image shown here is for reference only. The actual product received may differ.

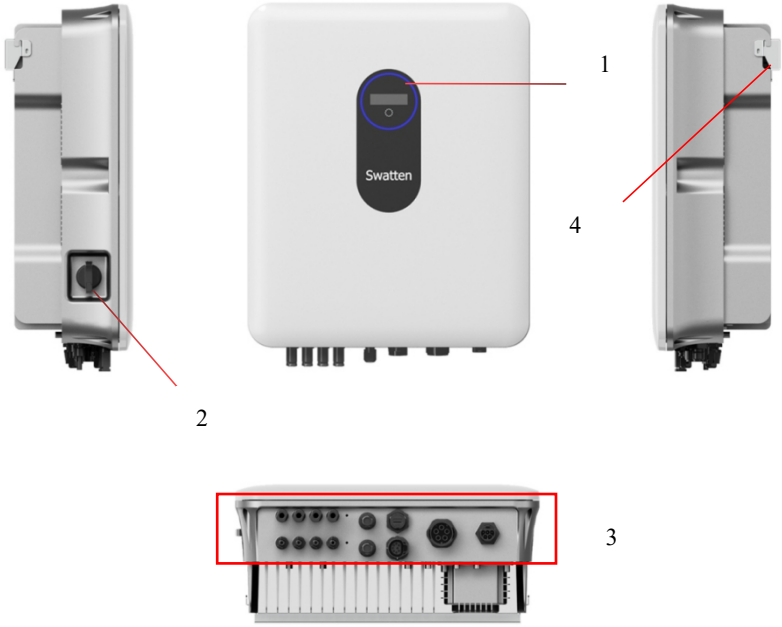

figure 2-1 Inverter Appearance

No.	Name	Description
1	LED indicator panel	Indicates the current operating state of the inverter.
2	DC switch(Optional)	Safely disconnects the DC circuit of the inverter.
3	Electrical connection area	Includes DC terminals, AC terminals, battery terminals, communication terminals and additional grounding terminal.
4	Hanger	Used to hang the inverter on the wall-mounting bracket.

Dimensions

The following figure shows the dimensions of the inverter.

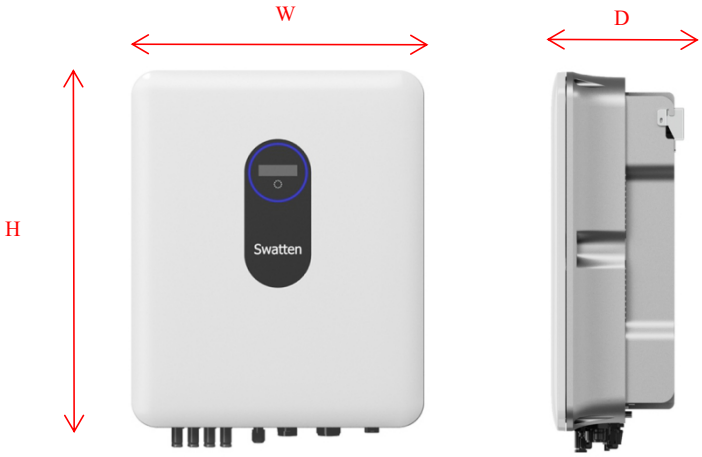

figure 2-2 Dimensions of the Inverter

Inverter Model	W(mm)	H(mm)	D(mm)
SiH-5kW-TH	450	550	185
SiH-6kW-TH	450	550	185
SiH-8kW-TH	450	550	185
SiH-10kW-TH	450	550	185

2.3 Symbols on the Product

Symbol	Explanation
PV	Parameters on the PV side.
BAT	Parameters on the Battery side.
AC-Grid	Parameters on the AC on-grid side.
AC-EPS	Parameters on the AC EPS side.
	Danger to life due to high voltages! Do not touch live parts for 10 minutes after disconnection from the power sources. Only qualified personnel can open and maintain the inverter.
	Read the user manual before maintenance!
	There is a deadly high pressure danger! Only professional and qualified personnel are allowed to install and operate!
RoHS	RoHS mark of conformity.
	Regulatory compliance mark.
UK CA	UKCA mark of conformity.
CE	CE mark of conformity.
	Do not dispose of the inverter together with household waste.

TÜV mark of conformity.

2.4 LED Panel

The LED panel with a display screen and an indicator is on the front of the inverter.

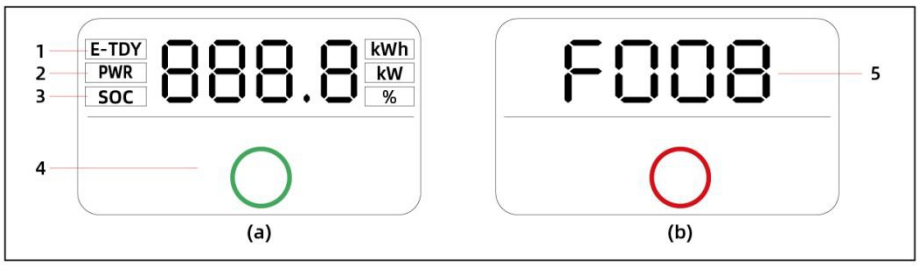

Figure 2-3 LED Panel

(a) Normal state (b) Error state

No.	Name	Description
1	E-day	Today's energy yield
2	PWR	Real-time AC output power
3	SOC	Battery SOC (State of Charge)
4	LED indicator	To indicate the working state of the inverter. Touch it to switch the information in normal state or view multiple error codes in error state.
5	Error code	The error code in the figure is just an example.

- In normal operation, the LED indicator will alternate the display of E-day, Pac, and SOC information. Additionally, users have the option to switch between the displayed information by simply touching the LED indicator.
- During an error state, touching the LED indicator will provide access to multiple error codes for easy viewing and troubleshooting.
- In the event of no user activity for 5 minutes, the display screen will automatically turn off to conserve power. Users can reactivate the display screen by simply touching the LED indicator.

The following chart description of the LED indicator

LED color	State	Definition
Green	On	The inverter is operating normally.
	Flashing	The inverter is at standby or startup state (not feeding power into the grid).

Red	On	A system fault has occured.
Grey	Off	Both the AC and DC sides are powered down.

WARNING

Please be aware that voltage may still be present in the AC side circuits even after the indicator is turned off. It is crucial to prioritize electrical safety precautions during operation.

2.5 DC Switch

The DC switch serves as a means to safely disconnect the DC circuit whenever required. To initiate the inverter's operation, it automatically functions when the input and output requirements are met. However, in the event of a fault or when there is a need to halt the inverter, rotating the DC switch to the "OFF" position will stop its operation.

> Note:
> Turn the DC switch to the "ON" position before restarting the inverter.

2.6 PV Energy Storage System (PV ESS)

2.6.1 PV Energy Storage System (PV ESS)

The following figure shows inverter application in a PV energy storage system.

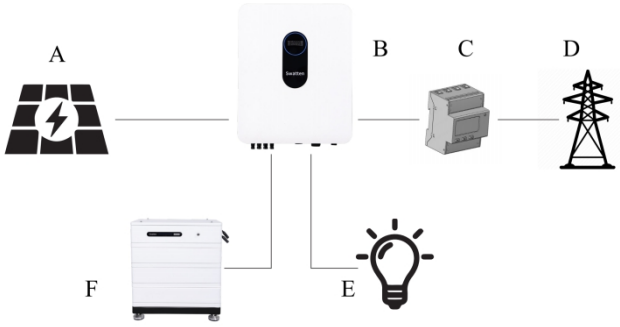

figure 2-4 PV Energy Storage System

Item	Description	Note
A	PV strings	Compatible with monocrystalline silicon, polycrystalline silicon, and thin-film modules without grounding.
B	Inverter	SiH-5kW-TH/SiH-6kW-TH/SiH-8kW-TH/SiH-10kW-TH
C	Metering device	Meter cupboard with power distribution system.

D	Utility grid	TT, TN-C, TN-S, TN-C-S.
E	EPS Loads loads	Loads, connected to inverter EPS port, which need uninterrupted power supply.
F	Battery (optional)	A Li-ion battery.

The following figure shows the common grid configurations.

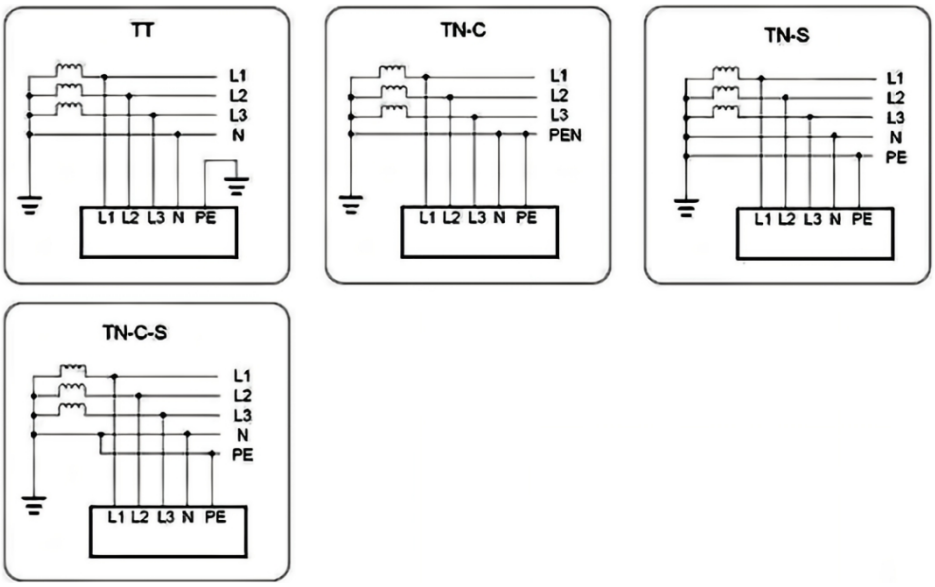

2.6.2 Declaration For EPS Function

DANGER

This product is not intended for supplying power to life-sustaining medical devices. Power outages may pose a risk to life when relying on this product for such purposes.

The following statements outline Swatten's general policies concerning the hybrid inverters described in this document:

1 For hybrid inverters, the electrical installation typically involves connecting the inverter to both PV modules and batteries. In EPS mode, if there is no available power from batteries or PV modules, the EPS power supply will be automatically terminated. Swatten bears no responsibility for any consequences resulting from failure to comply with this instruction.

2 Normally, the switching time for activating the EPS mode is less than 10 ms. However, certain external factors may cause the system to fail in EPS mode. Therefore, users must be aware of the following conditions and adhere to the instructions:

- Do not connect loads that require a stable energy supply for reliable operation.
- Do not connect loads whose total capacity exceeds the maximum EPS capacity.
- Do not connect loads that may cause high start-up current surges, such as air conditioners, high-power pumps, vacuum cleaners, and hair dryers.
- Battery current may be limited due to factors including temperature and weather conditions.

Declaration For EPS Overload Protection

In the event of overload protection, the inverter will automatically restart. If overload protection is repeatedly triggered, the restart time may increase (up to a maximum of 10 minutes). To avoid this, reduce the power of the EPS load to remain within the specified limits or remove loads that may cause high start-up current

surges.

2.6.3 Energy Management

Battery discharges to supply energy to loads. In cases where the battery is empty or doesn't have sufficient power, the grid will provide power to both EPS loads and normal loads.

When the grid is available, the hybrid inverter activates the bypass function. This allows the EPS loads to be directly connected to the grid via the integrated bypass switch in the inverter.

If the Smart Energy Meter is either not present or experiencing abnormalities, the inverter will continue to operate normally. However, the battery will only be allowed to charge and not discharge. In this scenario, the feed-in power setting becomes ineffective, and the DO function for optimized mode will be disabled.

Energy Management during Daytime

The energy management system (EMS) defaults to self-consumption mode. The following scenarios illustrate the energy management process:

- Scenario 1: PV power generation > Load power consumption
  - First,PV power is prioritized for the EPS loads first, followed by normal loads and then the battery.
  - If the battery is fully charged, any excess power will be fed back to the grid. The feed-in power will not exceed the feed-in limitation value set in the initial settings.
- Scenario 2: PV power generation < Load power consumption
  - In this case, the battery will discharge to compensate for the energy shortfall.
  - If the combined power from the PV and battery is still insufficient to meet the load power demand, the inverter will draw power from the mains (grid) to make up for the deficit.

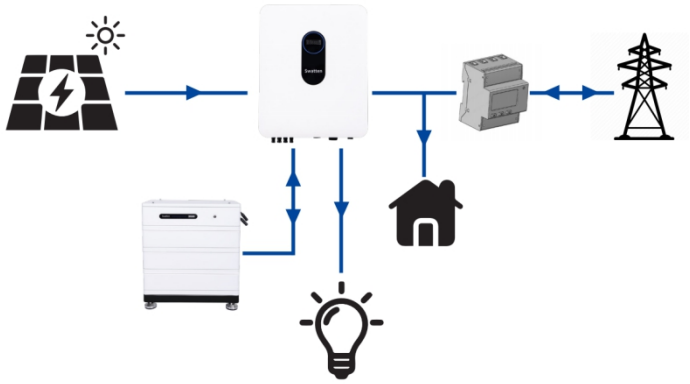

With current No current

Energy Management during Night

During the nighttime period, energy management operates as follows:

- Battery Discharge: With available energy, the battery will discharge to provide power for the loads. It acts as the primary source of power during this time.
- Grid Power Supply: If the discharge power of the battery is insufficient to meet the load requirements, the grid will automatically supply power to the loads. This ensures a continuous and uninterrupted power supply, even if the battery capacity is depleted or unable to sustain the load demand.

By combining the discharge capability of the battery and the EPS power from the grid, the system ensures reliable and continuous power supply during nighttime operations.

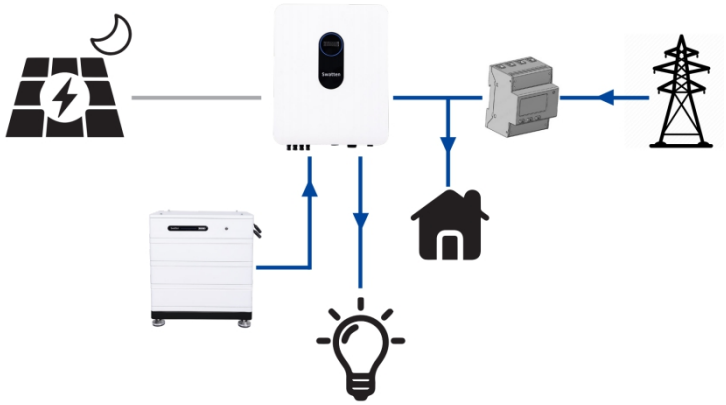

With current No current

During night, when the battery is empty, it will enter into standby mode. In this case, the grid will supply all power for loads.

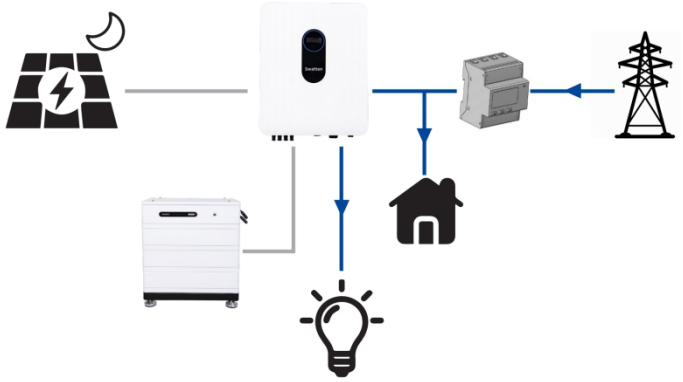

With current No current

2.7 Retrofitting the Existing PV system

The hybrid inverter is designed to be compatible with any three-phase PV grid-connected inverters. By adding the hybrid inverter to an existing PV system, it can be transformed into a PV Energy Storage System (ESS). In this configuration, the power generated by the existing PV inverter will first supply the loads and then charge the battery. The energy management function of the hybrid inverter allows for significant improvement in self-consumption of the new system.

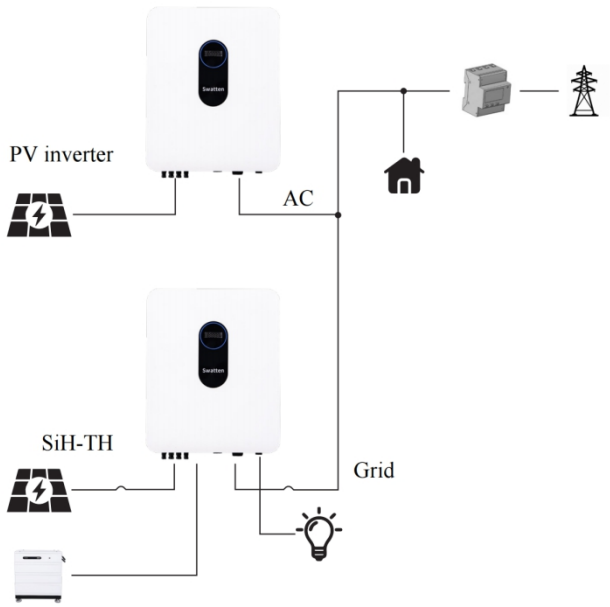

figure 2-9 On-grid Port to Retrofit the Existing PV System

The AC terminal of the PV inverter and the GRID terminal of the hybrid inverter are interconnected in parallel.

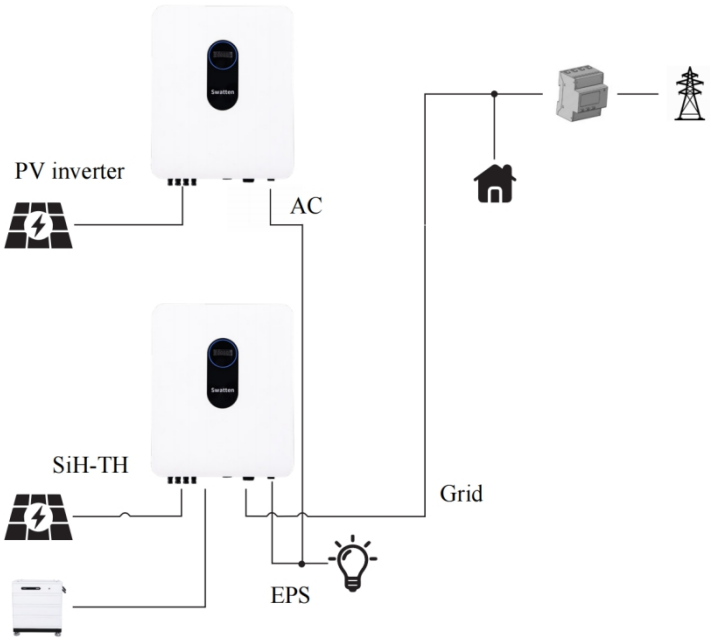

figure 2-6 EPS terminal to Retrofit the Existing PV System

To optimize the utilization of PV energy and enable the PV inverter to operate even when off-grid, the EPS terminal is utilized to retrofit the existing PV system.

In this setup, the AC terminal of the PV inverter is connected in parallel with the EPS terminal of the hybrid inverter. However, please note that this option is not available in the European region.

It is important to ensure that the power output of the PV inverter does not exceed the nominal power of the hybrid inverter. In the case of a single-phase PV inverter, the power output should not exceed the single-phase nominal power of the three-phase hybrid inverter.

Note:

1. In a zero-export scenario, the hybrid inverter can prevent power from being exported to the grid, but it cannot guarantee zero export for the PV inverter itself. If you require a zero-export solution for the PV inverter, please contact the manufacturer of the PV inverter for their specific zero-export solution.
2. The use of PV modules with the hybrid inverter is optional.

3 Function Description

3.1 Safety Function

3.1.1 Protection

The inverter incorporates multiple protective features, encompassing safeguards against short circuits, monitoring of grounding insulation resistance, protection against residual currents, anti-islanding measures, as well as safeguards for DC over-voltage and over-current conditions, and more.

3.1.2 Earth Fault Alarm

The device is equipped with a grounding fault alarm system. In the event of inadequate or nonexistent grounding on the AC side, an audible alarm will sound and the LED indicator will illuminate in red.

3.2 Energy Conversion and Management

The inverter efficiently transforms the DC power derived from either the PV array or the battery into AC power that meets the specifications of the grid. Additionally, it facilitates the transfer of DC power from the PV panel to the battery.

Incorporating a bidirectional converter, the inverter has the capability to both charge and discharge the battery, ensuring optimal utilization of energy.

To maximize the power output from PV strings that may have varying orientations, tilts, or module structures, the inverter employs multiple string Maximum Power Point (MPP) trackers. These trackers enable the inverter to extract the maximum available power from each PV string, thereby enhancing overall system efficiency.

3.2.1 Power Derating

Power derating is implemented as a protective measure to safeguard the inverter against potential overload or faults. Moreover, the derating function can be activated in accordance with the requirements specified by the utility grid. Various situations that may necessitate inverter power derating include:

- Over-temperature conditions, which encompass both ambient temperature and module temperature.
- High input voltage levels.
- Grid under-voltage occurrences.
- Grid over-frequency events.
- Power factor deviations from the rated values.
- High altitude environments.

For seamless integration with demand response capabilities, the inverter is equipped with a terminal block designed to connect to a demand response enabling device (DRED). This DRED facilitates the activation of demand response modes (DRMs). When triggered, the inverter promptly detects and initiates a response to all supported demand response commands within a swift 2-second timeframe.

3.2.2 Regular Operational Voltage Range

The inverters are designed to operate effectively within the allowable voltage range for a specified observation time. The specific conditions for setting these voltage range parameters depend on whether the connection is for a normal operational start-up or an automatic re-connection following a tripping event

triggered by interface protection.

If the voltage level deviates from the defined operational levels, the inverter will disconnect from the grid within the protection time frame. In the event of a short-lived disturbance that lasts for a duration shorter than the required protection time, the inverter can automatically reconnect to the grid once the voltage level returns to normal operating levels after the disturbance subsides.

3.2.3 Regular Operational Frequency Range

The inverter is designed to operate within its specified frequency range for a minimum observation time. The specific conditions for setting these frequency range parameters depend on whether the connection is for a normal operational start-up or an automatic re-connection following a tripping event triggered by interface protection..

If the frequency level falls outside the defined operational range, the inverter will disconnect from the grid. In the case of a temporary disturbance that lasts for a duration shorter than the required protection time, the inverter can automatically reconnect to the grid once the frequency level returns to normal operating levels after the disturbance subsides.

3.2.4 Reactive Power Regulation

The inverter offers reactive power regulation modes to provide grid support. The specific reactive power regulation mode can be configured and adjusted through the SOLARMAN Smart App.

3.3 Communication and Configuration

The inverter offers RS485, Ethernet, WLAN, and CAN ports for device and system monitoring. These ports allow configuration of parameters for optimal operation. Inverter information is accessible through the SOLARMAN Smart App.

The import power refers to the total power obtained from the grid, which encompasses the power used to charge the battery from the grid through the inverter, the power consumed by local loads, and the power supplied to loads connected to the inverter's EPS port from the grid. To comply with local regulations, it is necessary to calculate the maximum allowable system power based on the wire size and circuit breaker required for the selected model. This value can be configured as the Import Power Limit, which can be conveniently adjusted using the SOLARMAN Smart App.

3.4 Battery Management

To optimize battery lifespan, the inverter will conduct battery charging, discharging, and maintenance activities based on the battery status information received from the Battery Management System (BMS).

NOTICE

If the battery has remained unused or has not been fully charged for an extended period of time, it is advisable to manually perform a full charge every 15 days. This practice helps to maintain the battery's lifespan and optimal performance.

3.4.1 Charge Management

EPS Charge Management

The purpose of the emergency charge management function is to safeguard the battery against damage resulting from prolonged excessive discharge. During emergency charging, the inverter is unable to respond

to discharge commands. The table below outlines the emergency charge conditions for different types of Li-ion batteries.

table 3-1: EPS Charge Management for Li-ion Battery

Status	Conditions
Trigger	Either of the following conditions is met: - A battery under-voltage warning is triggered. - An emergency charge command is reported to the inverter.
Finish	All the following conditions are met: - The battery under-voltage warning is cleared. - The emergency charge command reported to the inverter is cleared.

table 3-2 Default SOC Conditions for Li-ion Battery EPS Charge

Type	Trigger SOC	Finishing SOC
SiB-H-F	SOC = 0%	SOC > 10%

Normal Charge Management

During normal operation, when the battery voltage is within the acceptable range, the inverter is capable of charging the battery if the PV power exceeds the load power. It ensures that the battery is not overcharged.

The maximum charge current is restricted to the lower value between the following:

- The maximum charge current specified by the inverter.
- The maximum/recommended charge current recommended by the battery manufacturer.

As a result, the battery charge power may not reach the nominal power level.

3.4.2 Discharge Management

Discharge Management

Discharge management is implemented to prevent deep discharging of the battery, ensuring its protection. The maximum allowable discharge current is limited to the lower value between the following:

- The maximum discharge current specified by the inverter.
- The maximum/recommended discharge current recommended by the battery manufacturer.

As a result, the battery discharge power may not reach the nominal power level.

4 Unpacking and Storage

4.1 Unpacking and Inspection

The product undergoes comprehensive testing and rigorous inspection prior to shipment. However, there is still a possibility of damage occurring during transit. Therefore, it is essential to conduct a thorough inspection upon receiving the product. Please follow these steps:

- Examine the packaging case for any visible signs of damage.
- Verify the contents of the delivery to ensure completeness, referring to the packing list.
- After unpacking, carefully inspect the inner contents for any signs of damage.

If any damage or incompleteness is detected, promptly contact Swatten or the transport company. It is advisable to provide photographs of the damage to facilitate the resolution process. It is important not to discard the original packaging case. When decommissioning the product, it is recommended to store it in the original packaging case for safekeeping.

NOTICE

Upon receiving the product, it is important to conduct a thorough inspection to ensure its integrity and avoid any potential damage. Please follow these steps:

- Examine the appearance and structural parts of the device for any signs of damage.
- Verify that the contents of the package match the items listed on the packing list. Ensure that you have received the correct product.
- If any issues or discrepancies are found during the inspection, refrain from installing the device and immediately contact your distributor for assistance. If the problem persists or your distributor is unable to resolve the issue, promptly reach out to Swatten for further support.

When unpacking the product, exercise caution to avoid causing any damage, especially if using tools. Take care to handle the product with care and ensure that no unintentional harm is inflicted upon it.

4.2 Scope of Delivery

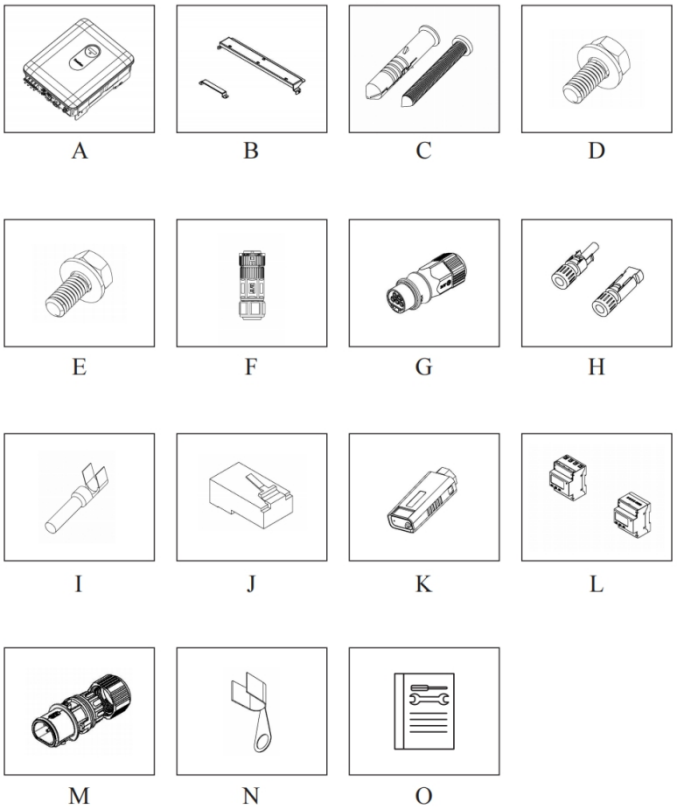

Item	Name	Quantity
A	Inverter	1
B	Wall-mounting bracket	1
C	Expansion plug set	4
D	M4 screws and washers	2
E	M5 screws and washers	3
F	AC connector set	1
G	EPS connector set	1
H	PV connectors	3~4
I	Crimp contact	3~4
J	RJ45 connector	2
K	WiFi logger	1
L	Smart Energy Meter	1
M	BAT-COM connector set	1
N	OT terminal *	2
O	Documents	1

4.3 Inverter Storage

To ensure the proper storage of the inverter when it is not immediately installed, please adhere to the following guidelines:

- Store the inverter in its original packing case, ensuring the desiccant is kept inside.
- Maintain a storage temperature between -30°C and +70°C at all times.
- Maintain a storage relative humidity between 0% and 95%, ensuring it is non-condensing.
- If stacking storage is necessary, ensure that the number of stacking layers does not exceed the limit indicated on the outer side of the packing case.

- Keep the packing case upright during storage.
- If the inverter needs to be transported again, ensure it is properly packed before loading and transporting.
- Avoid storing the inverter in areas susceptible to direct sunlight, rain, or strong electric fields.
- Avoid placing the inverter near items that may affect or damage it.
- Store the inverter in a clean and dry location to prevent dust and water vapor from causing erosion.
- Avoid storing the inverter in areas with corrosive substances or at risk of being accessed by rodents and insects.
- Conduct periodic inspections, at least once every six months.
- If any signs of insect or rodent bites are detected, promptly replace the packaging materials.
- If the inverter has been stored for more than a year, it is necessary to have it inspected and tested by professionals before putting it into operation.

NOTICE

It is crucial to store the inverter in accordance with the specified storage requirements. Failure to meet these requirements may result in product damage, and it's important to note that such damage caused by improper storage is not covered by the warranty. To ensure the safekeeping of the inverter and maintain warranty coverage, please adhere to the storage guidelines provided.

5 Mechanical Mounting

WARNING

Respect all local standards and requirements during mechanical installation.

5.1 Safety during Mounting

DANGER

Prior to installation, ensure that there are no active electrical connections. Take precautionary measures to avoid drilling near water or electrical wiring within the walls.

WARNING

The performance of the system can be affected by an inadequate installation environment. To optimize system performance, please consider the following:

- Install the inverter in a well-ventilated area to promote proper airflow and heat dissipation.
- Ensure that the heat dissipation system or vents of the inverter are not obstructed by objects or debris.
- Avoid installing the inverter in environments where flammable or explosive materials are present, as well as areas prone to smoke accumulation.

CAUTION

Improper handling may cause personal injury!

- When moving the inverter, be aware of its weight and keep the balance to prevent it from tilting or falling.
- Wear proper protective equipment before performing operations on the inverter.
- The bottom terminals and interfaces of the inverter cannot directly contact the ground or other supports. The inverter cannot be directly placed on the ground.

By following these guidelines, you can help maintain an optimal installation environment and ensure the reliable performance of the inverter.

5.2 Location Requirements

To ensure safe operation, long service life, and expected performance, it is important to select an optimal mounting location for the inverter. Consider the following guidelines:

- The inverter, if it has a protection rating of IP65, can be installed both indoors and outdoors, providing flexibility in choosing the mounting location.
- Install the inverter in a location that allows for easy electrical connection, operation, and maintenance. This will facilitate access to the inverter for any necessary maintenance or troubleshooting tasks.

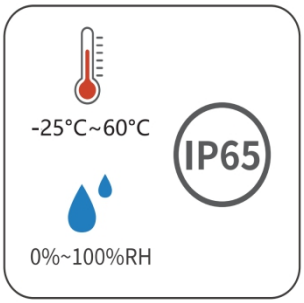

5.2.1 Environment Requirements

- Ensure an installation environment free from flammable or explosive materials.

- Choose a location that is not accessible to children to ensure their safety.
- Ensure that the ambient temperature and relative humidity of the installation site meet the specified requirements.
- To prolong the service life of the inverters, avoid direct exposure to sunlight, rain, and snow. Consider installing them in sheltered areas to provide protection from these elements.

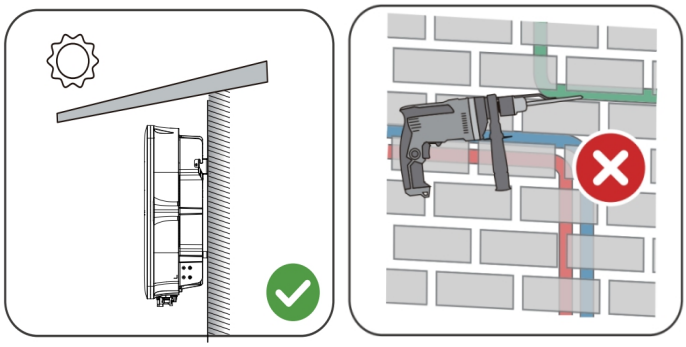

- Ensure proper ventilation for the inverter with adequate air circulation.

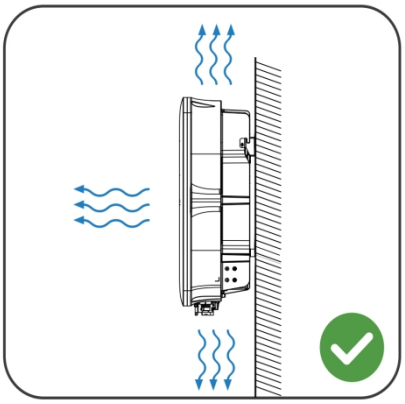

- Due to operational noise, it is not recommended to install the inverter in living areas.

5.2.2 Carrier Requirements

The mounting structure for the inverter must adhere to local/national standards and guidelines. The installation surface should be sufficiently sturdy to support four times the weight of the inverter and be suitable for its dimensions (e.g., cement walls, plasterboard walls, etc.).

5.2.3 Angle Requirements

The inverter should be installed in a vertical position. It should never be installed horizontally, tilted forward or backward, or upside down.

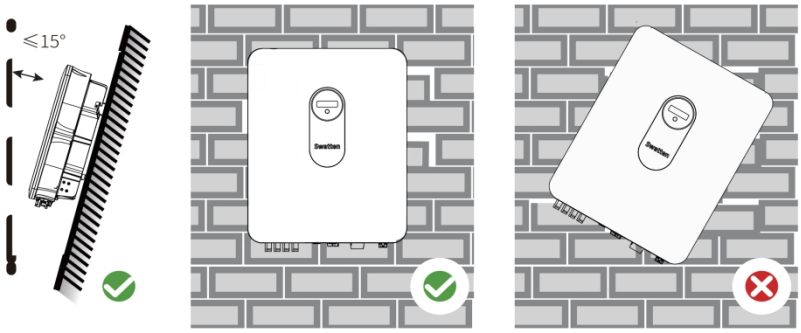

5.2.4 Clearance Requirements

Allow ample clearance around the inverter to ensure proper heat dissipation. Install the inverter at a suitable height for convenient viewing of the LED indicator and easy access to the operating switch(es).

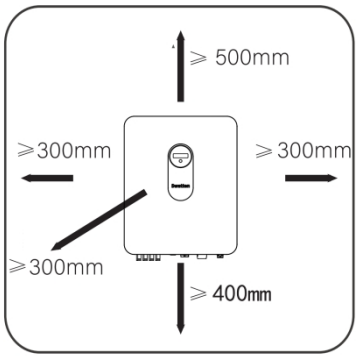

5.3 Installation Tools

Installation tools include but are not limited to the following recommended ones. If necessary, use other auxiliary tools on site

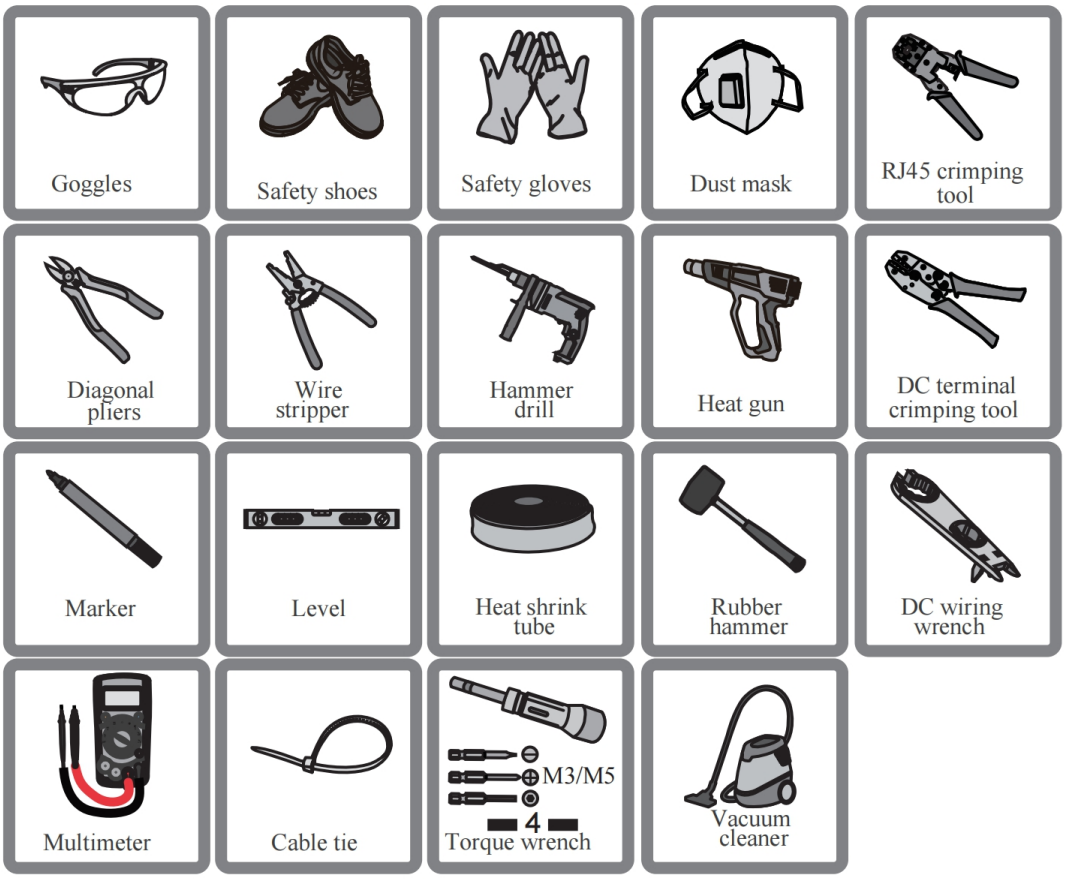

5.4 Moving the Inverter

When transferring the inverter to the installation location, please adhere to the subsequent guidelines:

- Maintain constant awareness of the inverter's weight.
- Employ the handles situated on both sides of the inverter to lift it.
- Mobilize the inverter with the assistance of one or two individuals or with the aid of an appropriate transportation device.
- Ensure that the equipment is securely fastened before releasing it.

CAUTION

Please exercise caution to prevent personal injuries while handling the inverter. Adhere to the following guidelines:

- Ensure an adequate number of personnel are assigned to carry the inverter based on its weight, and installation personnel should wear appropriate protective gear like impact-resistant shoes and gloves.
- Take note of the inverter's center of gravity to prevent tilting during handling.
- Avoid placing the inverter directly on a hard surface, as it may damage the metal enclosure. Instead, use protective materials such as a sponge pad or foam cushion underneath the inverter.
- When moving the inverter, hold it by the designated handles and avoid gripping the terminals for transportation.

5.5 Installing the Inverter

Mount the inverter securely on the wall using the supplied wall-mounting bracket and expansion plug sets. We recommend using the provided expansion plug set, as illustrated below, for the installation.

(1) (2) (3) (4)

(1) Self-tapping screw M6 (2) Expansion tube (3) Fender washer (4) Spring washer

Step 1 Place the mounting plate horizontally against the wall and mark the positions where the holes will be drilled.

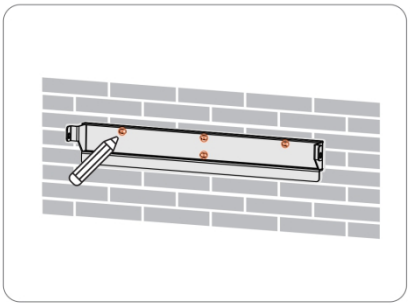

Step 2 Use a hammer drill with a 10mm diameter drill bit to drill holes into the wall to a depth of 80mm.

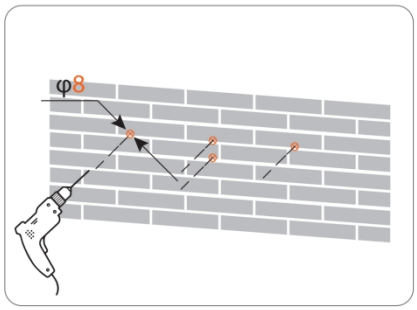

Step 3 Insert the expansion bolts into the drilled holes and secure the mounting plate firmly against the wall.

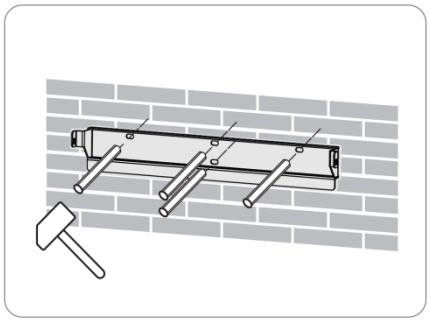

Step 4 Attach the inverter onto the mounted plate, ensuring it aligns with the holes on the plate.

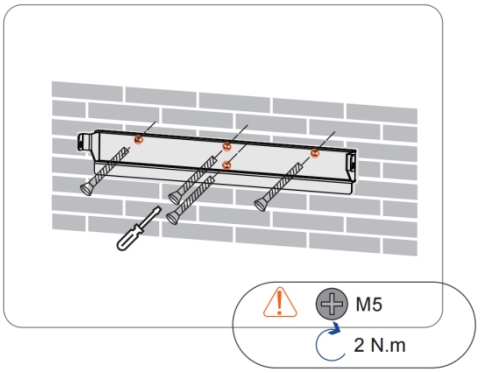

Step 5 Use nuts to securely fasten the mounting plate and the inverter together, ensuring they are tightly connected.

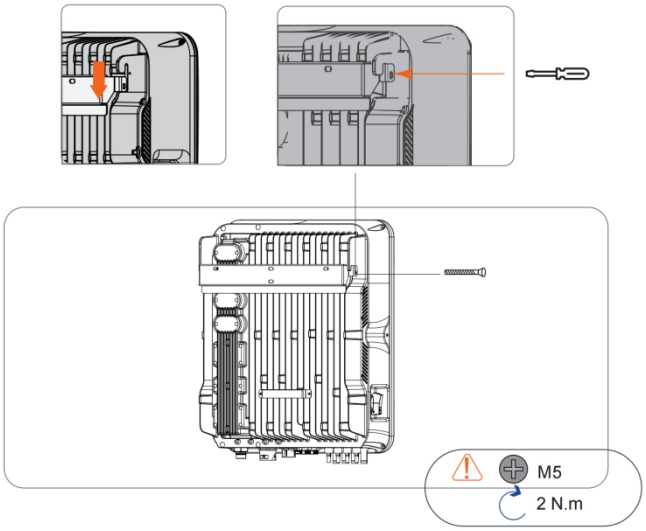

NOTICE

Check the level of the mounting bracket and make adjustments as necessary until the bubble in the level is positioned in the middle.

Ensure that the holes drilled into the wall have a depth of approximately 70mm.

6 Electrical Connection

6.1 Safety Instructions

DANGER

The PV string produces extremely high voltage when exposed to sunlight, which can be lethal.

Operators must wear appropriate personal protective equipment during electrical connections.

Before touching any DC cables, ensure that they are voltage-free using a measuring instrument.

Follow all safety instructions provided in the relevant documents regarding PV strings.

DANGER

- Prior to electrical connections, ensure that the inverter switch and all switches connected to the inverter are set to the "OFF" position to avoid the risk of electric shock.
- Verify that the inverter is undamaged and all cables are voltage-free before performing any electrical work.
- Do not close the AC circuit breaker until the electrical connection is complete.

WARNING

Product damage resulting from incorrect wiring is not covered by the warranty.

- Electrical connections should only be carried out by professionals.
- Operators must wear proper personal protective equipment during electrical connections.
- All cables used in the PV generation system must be securely attached, adequately insulated, and correctly sized.

NOTICE

All electrical connections must adhere to local and national/regional electrical standards.

- Cables used by the user must comply with the requirements of local laws and regulations.
- Connection of the inverter to the grid requires permission from the national/regional grid department.

NOTICE

- All unused terminals must be covered with waterproof covers to maintain the protection rating.
- After completing the wiring, seal the cable inlet and outlet holes with fireproof/waterproof materials such as fireproof mud to prevent the entry of foreign matter or moisture, which may affect the long-term operation of the inverter.
- Adhere to the safety instructions related to PV strings and the regulations concerning the utility grid..

Note:
The cable colors shown in the figures in this manual are for reference only. Select cables according to the local cable standards.

6.2 Terminal Description

All electrical terminals are located at the bottom of the inverter.

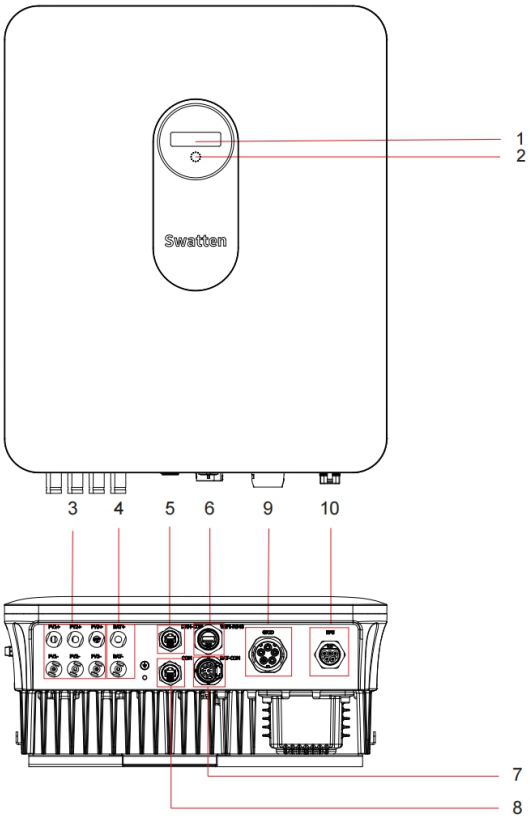

figure 6-1 Terminals

All electrical terminals on the inverter are positioned at the bottom.

It's important to note that the image provided is for reference purposes only and the actual product received may vary in appearance.

No.	Name	Description	Decisive Voltage Classification
1	LED	Display Data	Ignore
2	Button	Toggle Display Data	Ignore
3	PV1+,PV1-,PV2+, PV2-,PV3+,PV3-	MC4 terminals for PV input. The terminal number depends on inveter model.	DVC-C
4	BAT+,BAT-	Connectors for the battery power cables	DVC-C
5	DRM-COM	Communication connection for DRM	DVC-A
6	WIFI-RS485	Communication accessory port to be connected to SOLARMAN Smart communication module.	DVC-A
7	BAT-COM	Communication connection for Smart meter	DVC-A
8	COM	Communication connection for Battery	DVC-A
9	GRID terminal	AC terminal for connection to the utility grid	DVC-C
10	EPSterminal	AC terminal reserved for EPS loads	DVC-C

6.3 Electrical Connection Overview

System Wiring Diagram

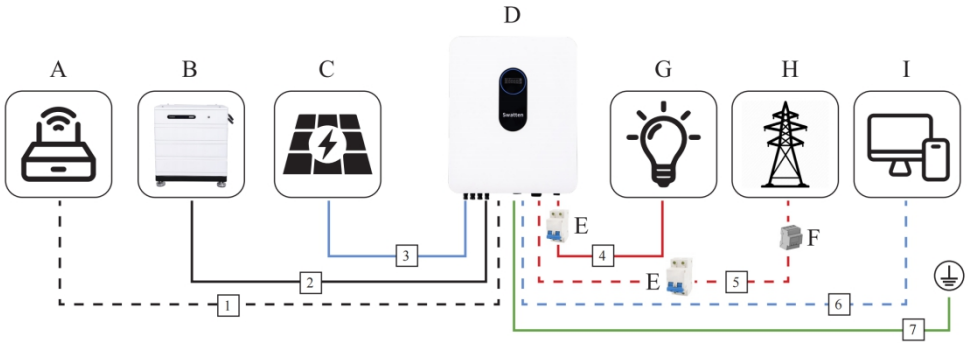

The electrical connection should be realized as follows:

(A) Router	(B) Battery	(C) PV string
(D) Inverter	(E) AC circuit breaker	(F) Smart Energy Meter
(G) EPS loads	(H) Grid	(I) Monitoring device

No.	Cable	Type	Cable diameter	Cross section
1	Ethernet cable	CAT 5E outdoor shielded network cable	4.8 ~ 6 mm	0.08*0.2 mm^2
2	Battery Power Cable	Complying with 1,000V and 35A standard	5.5 ~ 8 mm	6 mm^2
3	PV cable	Outdoor multi-core copper wire cable Complying with 1,000V and 30A standard	6 ~ 9 mm	4 ~ 6 mm^2
4	EPS cable	Outdoor 5-core copper wire cable	10 ~ 18 mm	4 ~ 6 mm^2
5	AC cable	Outdoor 5-core copper wire cable	12 ~ 22 mm	6 ~ 8 mm^2
6	Communication cable	Shielded twisted pair	4.8 ~ 6 mm	0.5 ~ 1.0 mm^2
		CAT 5E outdoor shielded network cable	4.8 ~ 6 mm	0.08 * 0.2 mm^2
7	Additional Grounding cable	Outdoor single-core copper wire cable	The same as that of the PE wire in the AC cable	

In case local regulations impose specific requirements for cables, follow the cable specifications mandated by those regulations.

Cable selection should take into consideration factors such as rated current, cable type, routing method, ambient temperature, and maximum expected line loss.

The distance for cabling between the battery and the inverter should not exceed 10 meters, and it is recommended to keep it within 5 meters for optimal performance.

6.4 EPS Wiring Diagram

For AU/NZ/SA

For Australia and New Zealand and South Africa, the neutral cable of GRID side and EPS side must be connected together. Otherwise EPS function will not work.

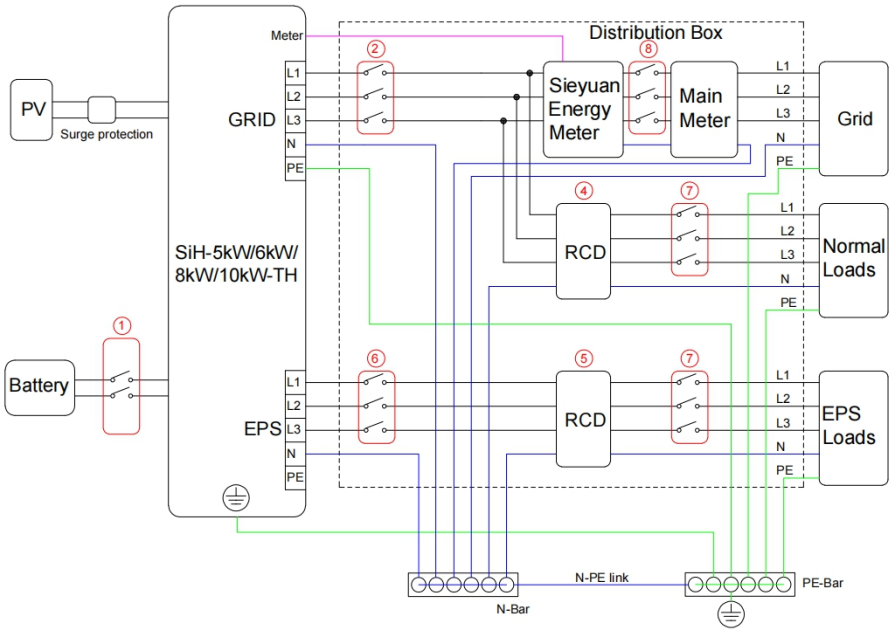

NO.	SiH-5kW/6kW/8kW/10kW-TH
①	40A/600V DC breaker*
②	32A/400VAC breaker
④⑤	30mA RCD (Comply with local regulation)
⑥	25A/400VAC breaker
⑦	Depends on loads
⑧	Depends on household loads and inverter capacity

Note 1: *If the battery already has an accessible internal DC breaker, there is no need for an additional DC breaker.

Note 2: The values provided in the table are recommendations and can be adjusted based on the specific conditions of the installation.

Note 3: It is suggested that the rated current of breaker ② is lower than that of breaker ⑤.

Note 4: If the rated current of the on-site power cables is lower than the recommended values mentioned above, it is important to consider the breaker specifications to match the power cables as a priority.

Note 5: The AC port of the inverter is designed to receive power from the grid and should be set in accordance with the grid circuit breaker.

For other countries

For other countries with grid systems that do not have specific requirements for wiring connections, the following diagram serves as an example:

Please note that this diagram is provided as an example and may need to be adjusted based on the specific regulations and standards of the country in which the installation is taking place. It is important to consult

local regulations and guidelines to ensure compliance and safety..

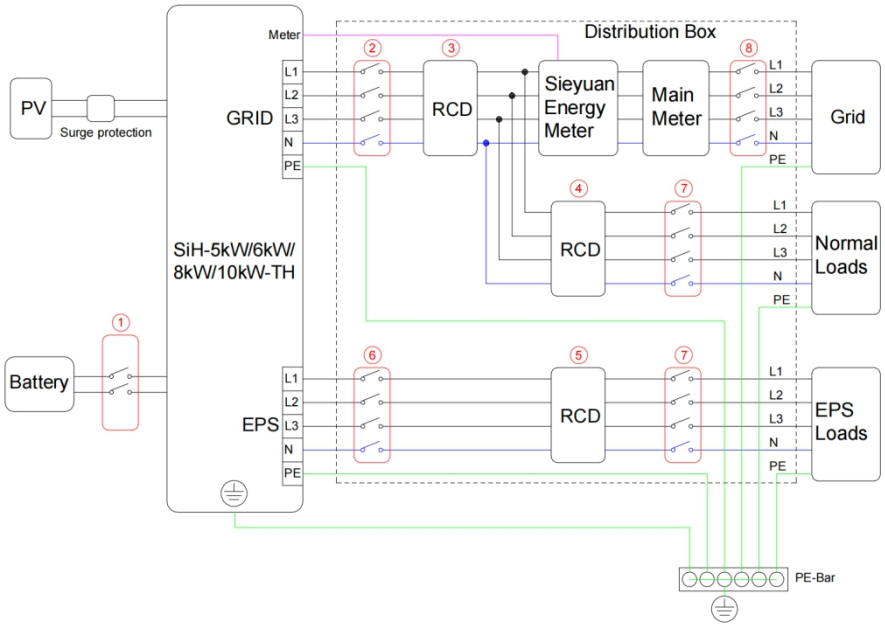

NO.	SiH-5kW/6kW/8kW/10kW-TH
①	40A/600V DC breaker*
②	32A/400VAC breaker
③	300mA RCD (Recommended)
④⑤	30mA RCD (Recommended)
⑥	25A/400VAC breaker
⑦	Depends on loads
⑧	Depends on household loads and inverter capacity (Optional)

Note 1: *If the battery already has an accessible internal DC breaker, there is no need for an additional DC breaker in the system.

Note 2: The values provided in the table are recommended values, but they can be adjusted to suit the actual conditions of the installation.

Note 3: It is suggested that the rated current of breaker ② be lower than the rated current of breaker ⑧ for proper protection and compatibility.

Note 4: If the rated current of the on-site power cables is lower than the recommended values mentioned above, it is important to consider the specifications of the breakers to ensure they match the power cables being used.

Note 5: The AC port of the inverter is designed to receive power from the grid. When connecting the inverter to the grid, the AC port should be set according to the specifications of the grid circuit breaker.

For TT system

In the TT system, : The diagram provided is an example for grid systems in the TT system. Please ensure compliance with local regulations and guidelines for wiring connections in your specific location.

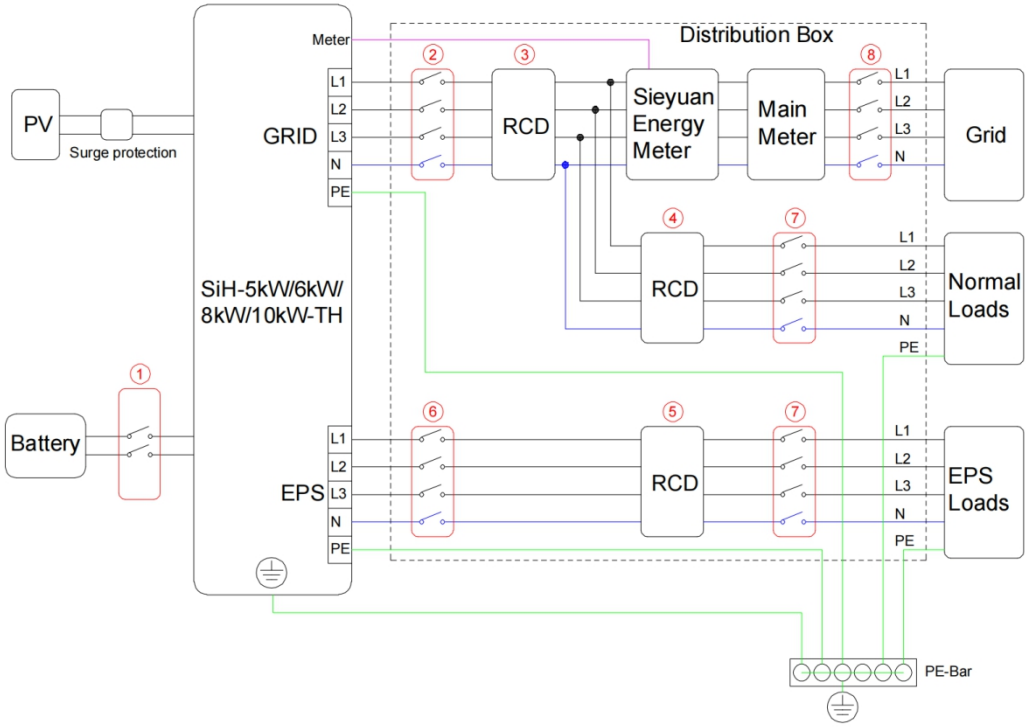

NO.	SiH-5kW/6kW/8kW/10kW-TH
①	40A/600V DC breaker*
②	32A/400VAC breaker
③	300mA RCD (Recommended)
④⑤	30mA RCD (Recommended)
⑥	25A/400VAC breaker
⑦	Depends on loads
⑧	Depends on household loads and inverter capacity (Optional)

Note 1: * If the battery has an accessible internal DC breaker, no additional DC breaker is required.

Note 2: The values provided in the table are recommendations and can be adjusted based on the actual conditions.

Note 3: It is suggested to set the rated current of breaker ② lower than that of breaker ⑤.

Note 4: If the rated current of the on-site power cables is lower than the recommended values, consider matching the breaker specifications to the power cables as a priority.

Note 5: The AC port of the inverter is designed to receive power from the grid and should be set according to the grid circuit breaker.

6.5 External Protective Grounding Connection

DANGER

Electric shock!

- Ensure a reliable connection of the ground cable to prevent electric shock.

WARNING

- The inverter does not have a transformer, so neither the negative nor positive electrode of the PV string

can be grounded. Grounding these electrodes will result in abnormal operation of the inverter.

- Connect the grounding terminal to the external protective grounding point before connecting the AC cable, PV string, and communication cable.

WARNING

The external protective grounding terminal should meet at least one of the following requirements:

- The grounding cable should have a cross-sectional area of not less than 10mm^2 for copper wire or 16mm^2 for aluminum wire. It is recommended to have reliable grounding for both the external protective grounding terminal and the AC side grounding terminal.
- If the grounding cable has a cross-sectional area less than 10mm^2 for copper wire or 16mm^2 for aluminum wire, ensure reliable grounding for both the external protective grounding terminal and the AC side grounding terminal.

Grounding connections can be made using other methods that comply with local standards and regulations. Swatten shall not be held liable for any consequences arising from these connections.

6.5.1 External Protective Grounding Requirements

All non-current carrying metal parts and device enclosures in the PV power system should be grounded, such as PV module brackets and inverter enclosures.

If there is only one inverter in the PV system, connect the external protective grounding cable to a nearby grounding point.

If there are multiple inverters in the PV system, connect the grounding points of all inverters and the PV array frames to an equipotential cable (according to the site conditions) to establish an equipotential connection.

6.5.2 Connection Procedure

There are two additional grounding terminals available on the bottom and right side of the inverter. You can connect the grounding cable to either one of them. Please note that the external grounding cable needs to be prepared by the customers.

Step 1: Prepare the cable and OT/DT terminal.

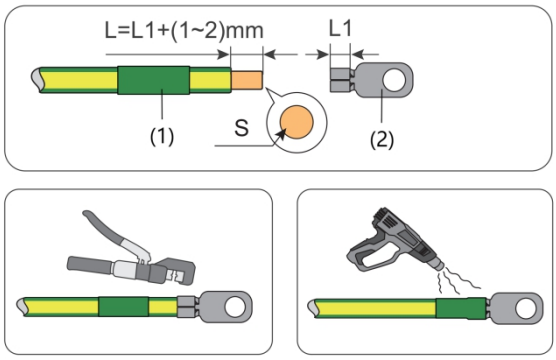

(1) Heat shrink tubing (2) OT/DT terminal

Step 2: Remove the screw on the grounding terminal and securely fasten the cable using a screwdriver.

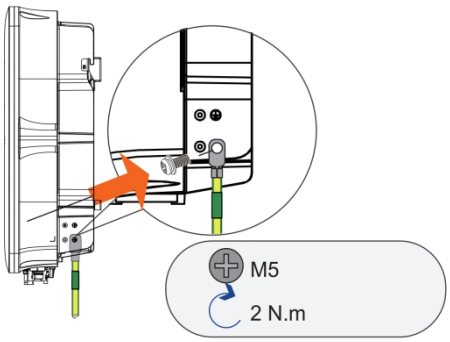

Step 3: Apply paint to the grounding terminal to ensure corrosion resistance.

--End

6.6 AC Cable Connection

6.6.1 AC Side Requirements

Only with the permission of the local grid department, the inverter can be connected to the grid. Before connecting the inverter to the grid, it is important to ensure that the grid voltage and frequency meet the requirements specified in the "Technical Data" section. If there are any discrepancies, it is recommended to contact the electric power company for assistance.

An independent three or four-pole circuit breaker must be installed on the output side of the inverter. This circuit breaker ensures safe disconnection from the grid when needed. It is crucial for maintaining the safety of the system.

Inverter Model	Recommended Specification
SiH-5kW/6kW-TH	25A
SiH-8kW/10kW-TH	32A

WARNING

To ensure safe disconnection from the grid, AC circuit breakers should be installed on both the output side of the inverter and the grid side.

- Assess the need for an AC circuit breaker with a higher overcurrent capacity based on the specific conditions of the installation.
- Do not connect any local load between the inverter and the AC circuit breaker.
- Each inverter should have its own dedicated AC circuit breaker; multiple inverters cannot share a single AC circuit breaker..

Residual Current Monitoring Device

The inverter is equipped with an integrated universal current-sensitive residual current monitoring unit. It will automatically disconnect from the mains power if a fault current exceeding the limit is detected.

If the use of an external residual current device (RCD) is mandatory, the switch must be triggered at a residual current of 300 mA (recommended), or according to the regulations specific to the local area. For instance, in Australia, an additional 30 mA (Type A) RCD can be used with the inverter installations.

6.6.2 Connecting the AC Cable

The GRID terminal block is situated underneath the inverter. The GRID connection involves the three-phase-four-wire grid + PE connection (L1, L2, L3, N, and PE).

Step 1: Unscrew the swivel nut of the connector following steps 1, 2, 3, 4, and 5.

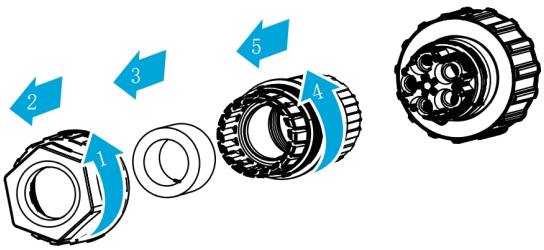

step 2 Strip 40 mm of the cable jacked and 12 mm(L) of the wire insulation.

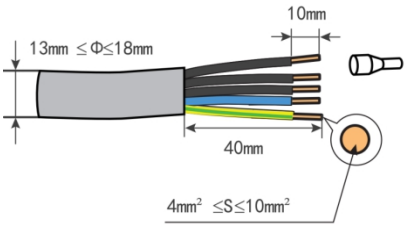

Step 3: Fasten the GRID/EPS terminal nut back in accordance with steps 1, 2, and 3. Press all wires onto the tubular terminals.

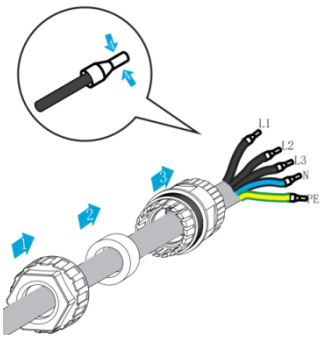

Step 4: Establish connections between L1, L2, L3, N, and PE and the corresponding position of the GRID/EPS terminal. Tighten with the appropriate tool.

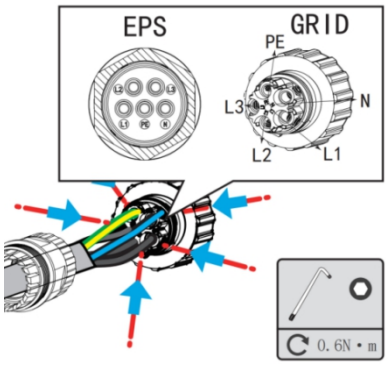

Step 5: Insert the terminals into the inverter grid socket as instructed in steps 1 and 2.

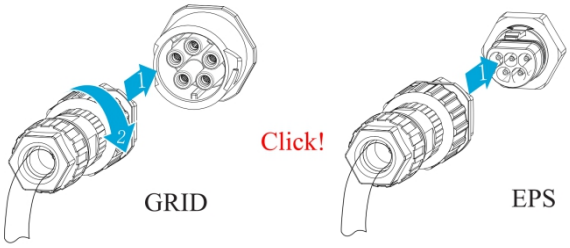

--End

6.7 Smart Meter Connection

WARNING

The L1, L2, L3, and N wires from the electricity meter must be connected to the GRID port in a one-to-one correspondence. Failure to adhere to this wiring arrangement may result in improper functioning or permanent damage to the machine. Swatten holds no responsibility for any damage caused to the machine due to this wiring error!!!

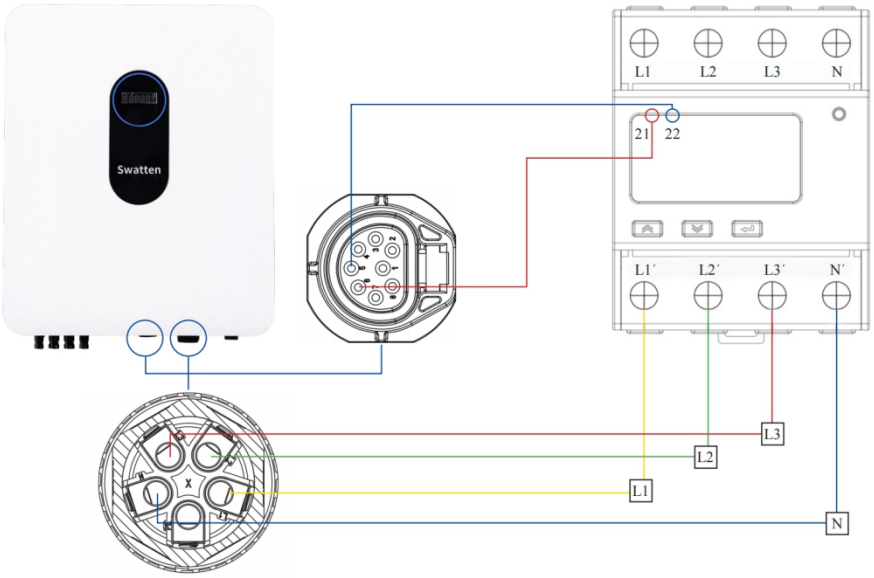

Wiring must be correct!!!

1. The power lines should be connected to the electricity meter in a one-to-one corresponding order and must not be connected incorrectly.

2. The communication lines should connect terminals 6 and 5 of the machine's BAT-COM to terminals 21 and 22 of the electricity meter, respectively.

6.8 DC Cable Connection (PV & Battery cable)

DANGER

The PV string produces dangerous high voltage when exposed to sunlight.

- Adhere to all safety instructions provided in the relevant documents regarding PV strings.

WARNING

- Make sure the PV array is well insulated to ground before connecting it to the inverter.
- Make sure the maximum DC voltage and the maximum short circuit current of any string never exceed inverter permitted values specified in "Technical Data".
- Check the positive and negative polarity of the PV strings, and connect the PV connectors to corresponding terminals only after ensuring polarity correctness.
- During the installation and operation of the inverter, please ensure that the positive or negative electrodes of PV strings do not short-circuit to the ground. Otherwise, an AC or DC short-circuit may occur, resulting in equipment damage. The damage caused by this is not covered by the warranty.
- Electric arc or cont-actor over-temperature may occur if the PV connectors are not firmly in place, and Swatten shall not be held liable for any damage caused.
- If the DC input cables are reversely connected or the positive and negative terminals of different MPPT are shorted to ground at the same time, while the DC switch is in the "ON" position, do not operate immediately. Otherwise, the inverter may be damaged. Please turn the DC switch to "OFF" and remove the DC connector to adjust the polarity of the strings when the string current is lower than 0.5A.

WARNING

Before connecting the PV array to the inverter, ensure that the resistance between the positive terminals of the PV string and earth, as well as between the negative terminals of the PV string and earth, is greater than 1 M Ohm.

NOTICE

The following requirements regarding PV string connection must be adhered to. Failure to comply may result in irreversible damage to the inverter, and such damage will not be covered by the warranty.

- Avoid mixing different brands or models of PV modules within one MPPT circuit, as well as using PV modules with different orientations or angles within a string. While this may not directly damage the inverter, it will negatively impact the performance of the system!

6.8.1 PV Input Configuration

In Australia and New Zealand, it is important to ensure that the DC power of any PV string does not exceed a specific level based on the string voltage to prevent derating. The following guidelines should be followed:

- For string voltage lower than 500 V, the DC power should be limited to <12.5 kW.
- For string voltage between 500 V and 800 V, the DC power should be limited to <10 kW.
- For string voltage between 800 V and 1000 V, the DC power should be limited to <8 kW.

For the SiH-5kW/6kW/8kW-TH inverter, each PV input operates independently and has its own Maximum Power Point Tracking (MPPT). As a result, the string configurations for each PV input may vary, including the PV module type, the number of PV modules in each string, the tilt angle, and the installation orientation.

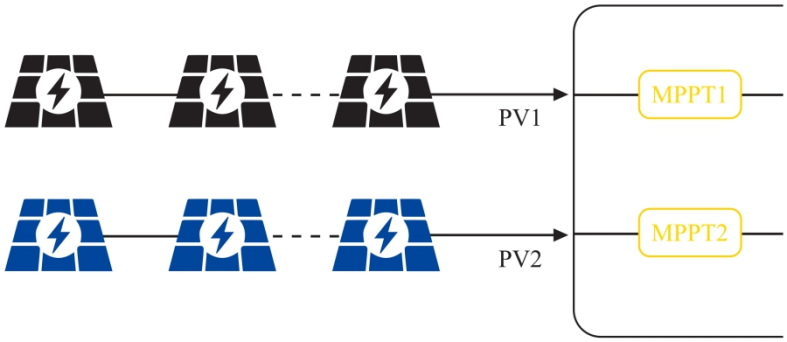

In the SiH-10kW-TH inverter, PV input PV1 is connected to MPPT1, while PV2 and PV3 are connected to MPPT2. It is recommended to have the same PV string structure for PV2 and PV3, including using the same type of PV modules, having the same number of modules, and matching the tilt and orientation. This ensures optimal utilization of PV power and improves the efficiency of the inverter.

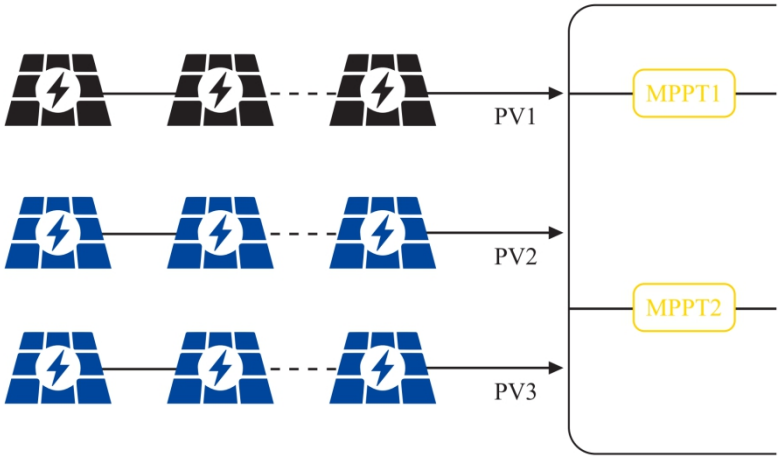

When paralleling two PV strings externally with the SiH-10kW-TH inverter, it is important to note that the paralleled strings can only be connected to PV2 or PV3. The other PV input cannot be used to connect additional PV strings. This is a specific requirement for the inverter model and should be followed to ensure proper operation and performance.

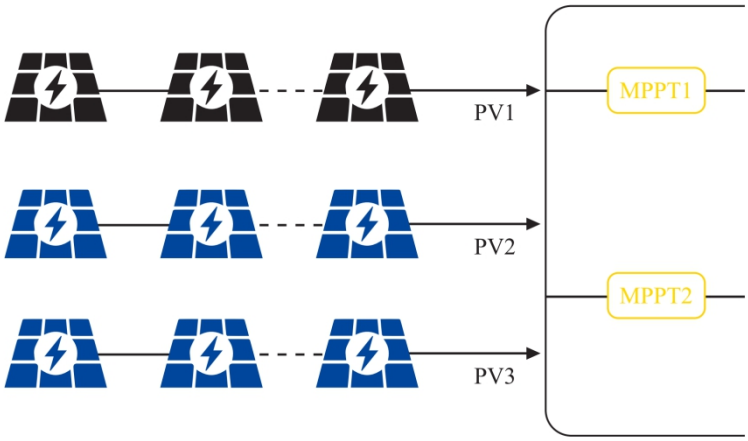

Before connecting the inverter to the PV inputs, it is necessary to simultaneously meet the following electrical requirements.

NO. Model	Open circuit Voltage Limit	Max. Current for Input Connector
SiH-5kW-TH	1000V	39A
SiH-6kW-TH		
SiH-8kW-TH		
SiH-10kW-TH		

6.8.2 Assembling the MC4 Connectors

DANGER

High voltage precautions:

- Prior to conducting any electrical operations, ensure that all cables are free of voltage.
- Do not connect the DC switch and AC circuit breaker until the electrical connections are completed.

To maintain IP65 protection, only use the provided connector.

Step 1: Strip the insulation from each DC cable by approximately 7 mm to 8 mm.

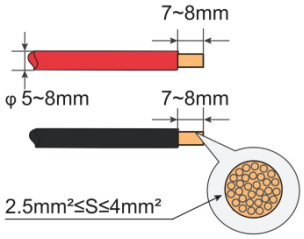

Step 2: Assembling the Crimp contact and cable, use the crimping pliers to securely assemble the cable ends.

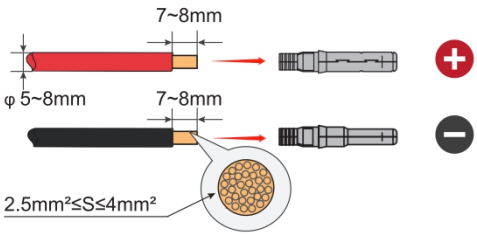

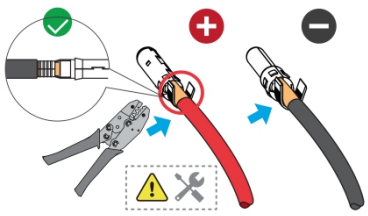

Step 3: Lead the cable through the cable gland and insert the crimp contact into the insulator until it audibly snaps into place. Pull the cable gently backward to ensure a firm connection. Tighten the cable gland and insulator using a torque of 2.5 N.m to 3 N.m.

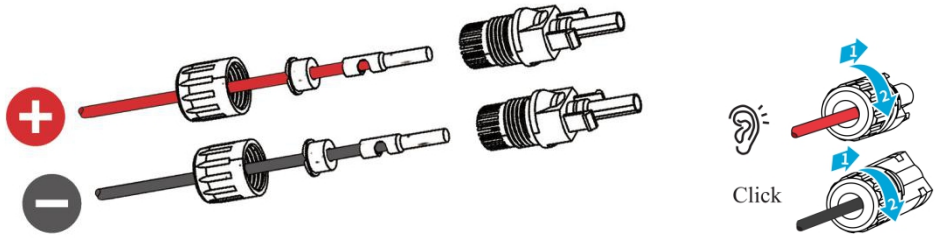

Step 4: Verify the polarity correctness.

NOTICE

Reversing the polarity can result in a fault or alarm state in the inverter, causing it to operate abnormally.

--End

6.8.3 Installing the PV and Battery Connector

This section primarily focuses on the cable connections on the inverter side. For the connections on the battery side and configuration, please refer to the instructions provided by the battery manufacturer.

WARNING

Inserting PV1/PV2/PV3 into the BAT terminal is strictly prohibited as it can cause permanent damage to the inverter.

WARNING

Use only properly insulated tools to prevent accidental electric shock or short circuits. If insulated tools are not available, cover all exposed metal surfaces of the tools, except their tips, with electrical tape.

WARNING

The plug connector should only be connected by trained electricians.

WARNING

Do not disconnect the battery connectors while under load!

Ensure that the inverter is completely shut down and in a no load state before disconnecting the battery connectors.

WARNING

During the installation and operation of the inverter, ensure that the positive or negative polarities of the batteries do not short-circuit to the ground. Failure to do so may result in AC or DC short circuits, leading to equipment damage. Such damage is not covered by the warranty.

Please note that off-grid mode is not recommended if the hybrid inverter is not connected to the battery.

All power cables are equipped with waterproof direct plug-in connectors that match the battery terminals located at the bottom of the inverter.

Step 1: Turn the DC switch to the "OFF" position.

Step 2: Verify the polarity correctness of the PV string cable and battery cable connections and ensure that the open circuit voltage does not exceed the inverter's input limit of 1,000V.

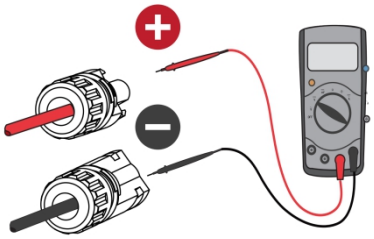

Step 3: Connect the connectors to their respective terminals, the PV panel cable to the PV terminal and the battery cable to the BAT terminal until an audible click is heard.

NOTICE

Only connect these connectors with other MC4 connectors. When making the connections, always adhere to the specifications for nominal voltage and nominal current. The smallest common value is acceptable.

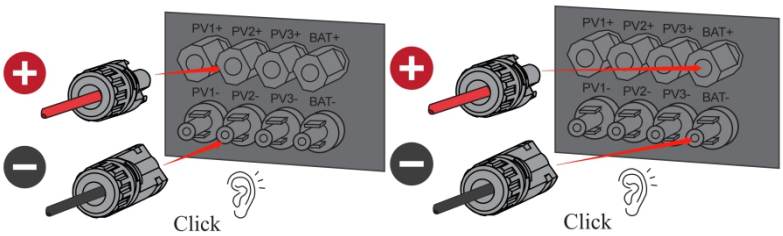

(1) PV cable connection (2) Battery cable connection

Step 4: Repeat the previous steps to connect the PV connectors of other PV strings.

Step 5: Use a terminal cap to seal any unused PV and battery terminals.

connections and ensure that the polarity of the optimizer cables is correct.

Step 6: Verify that the connectors are firmly and securely in place.

--End

6.9 Communication Connection

6.9.1 BAT-COM Connection

step 1 BAT-COM Connection

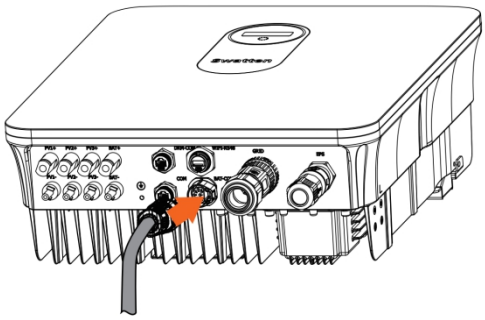

Step 2: The network cable connections for BAT-COM are illustrated in the following diagram:

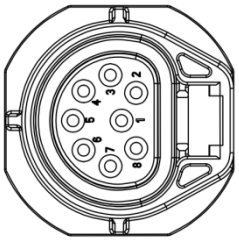

NO.	Function
1	BAT_CAN_H
2	BAT_CAN_L
3	NC OR GND
4	NC OR +12V
5	METER_RS485_B
6	METER_RS485_A
7	DO_NO
8	DO_COM

6.9.2 Meter Connection

The COM port is a communication interface on the inverter that enables real-time monitoring of the inverter's status and allows for modification of certain functions.

6.9.3 COM Connection

The COM port serves as the communication interface of the inverter. It enables you to monitor the real-time status of the inverter and make adjustments to its functions.

step 1 Obtain an Ethernet cable. Refer to the provided diagram to correctly connect the network cable to the COM port as specified.

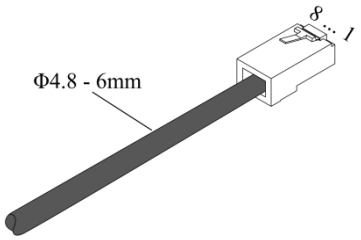

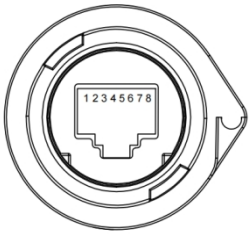

COM

NO.	Function
1	RSD_2
2	RSD_1
3	BACKUP_RS485_B
4	BACKUP_RS485_A
5	BAT_CAN_H
6	BAT_CAN_L
7	NC
8	NC

Step 2: Connect one end of the network cable to the corresponding port on the inverter.

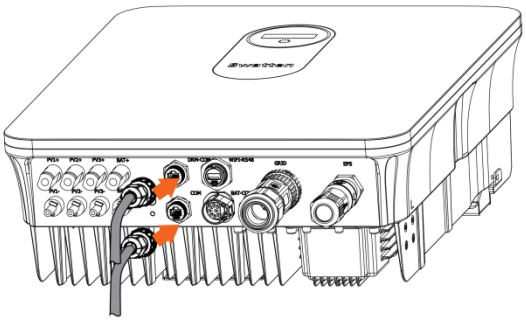

-End

6.9.4 WLAN- RS485 Connection

The WLAN-RS485 module allows the uploading of inverter's operational information to the corresponding app, enabling users to monitor the inverter's status in real-time. The following diagram illustrates the recommended connection mode for the WLAN-RS485 module.

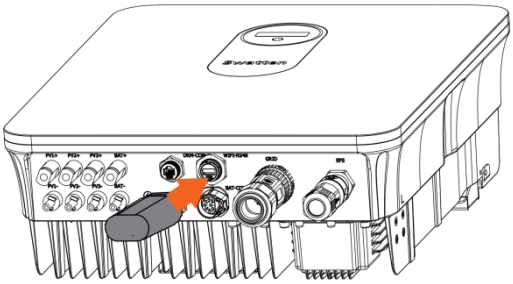

6.9.5 DRM-COM Connection

In Australia and New Zealand, the inverter is designed to support demand response modes according to the AS/NZS 4777 standard. Specifically, the inverter must support DRM 0 as specified in Table 1 of the standard. Additionally, the inverter should also be capable of supporting the other demand response modes listed in Table 1.

For a detailed description of the COM cable connection, please refer to section 6.7 of the documentation titled "Smart Meter Connection."

table 1: Demand Response Modes (DRMs)

Mode	Requirement
DRM 0	Operate the disconnection device
DRM 1	Do not consume power
DRM 2	Do not consume at more than 50% of rated power
DRM 3	Do not consume at more than 75% of rated power AND Source reactive power if capable
DRM 4	Increase power consumption (Subject to constraints from other active DRMs)
DRM 5	Do not generate power
DRM 6	Don not generate at more than 50% of rated power
DRM 7	Do not generate at more than 75% of rated power AND Sink reactive power if capable

DRM 8	Increase power generation (subject to constraints from other active DRMs)

Step 1: The network cable for DRM-COM follows the specifications outlined in the provided diagram.

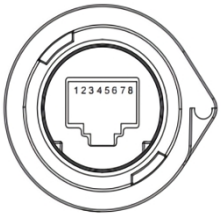

DRM-COM

NO.	Function
1	COM/DRM0
2	3V3_DRM
3	DRM4/8
4	DRM3/7
5	DRM2/6
6	DRM1/5
7	NC
8	NC

7 Commissioning

7.1 Inspection before Commissioning

Before starting the inverter, please ensure the following checklist items are checked:

- Confirm that all equipment has been installed securely and in accordance with the manufacturer's instructions.
- Verify that the DC switch(es) and AC circuit breaker are in the "OFF" position.
- Ensure that the ground cable is properly and securely connected.
- Check that the AC cable is correctly and reliably connected.
- Verify that the DC cable is properly and securely connected.
- Confirm that the communication cable is properly and securely connected.
- Seal any vacant terminals to prevent dust or moisture ingress.
- Ensure that no foreign items, such as tools, are left on top of the machine or inside the junction box (if applicable).
- Verify that the AC circuit breaker is selected according to the requirements specified in the manual and local standards.
- Check that all warning signs and labels on the inverter are intact and legible.

It is essential to complete these checks before starting the inverter to ensure safe and reliable operation.e.

7.2 Powering on the System

If all the checklist items have been verified and meet the requirements, follow these steps to start up the inverter for the first time:

Step 1: Turn on the AC circuit breaker located between the inverter and the grid.

Step 2 (Optional): If a battery is connected, connect the external DC circuit breaker between the inverter and the battery pack.

Step 3 (Optional): If a battery is connected, manually power on the battery pack.

Step 4: Rotate the DC switch to the "ON" position.

Step 5: If the irradiation and grid conditions meet the requirements, the inverter will start operating normally. Observe the LED indicator on the inverter to ensure it is functioning properly. Refer to the "2.4 LED Panel" section of the manual for an introduction to the LED screen and its indicator definitions.

Step 6: If using the SOLARMAN Smart system, refer to the quick guide for its indicator definitions.

By following these steps, you can safely start up the inverter and begin its normal operation..

--End

7.3 Stick Logger Installation

Assemble the logger to the inverter communication interface according to the diagram provided..

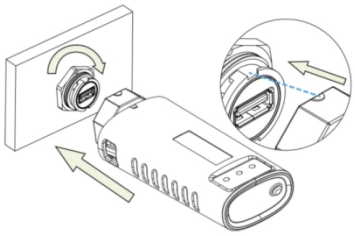

7.4 Download App

If you are a residential user, please scan the QR code provided below to download the SOLARMAN Smart app. Alternatively, you can visit the website https://home.solarmanpv.com to access the app.

SOLARMAN Smart

7.5 Registration

Go to SOLARMAN Smart and sign up.

Click on "Sign up" and create your account here. Please note that use an email address to register for an account.

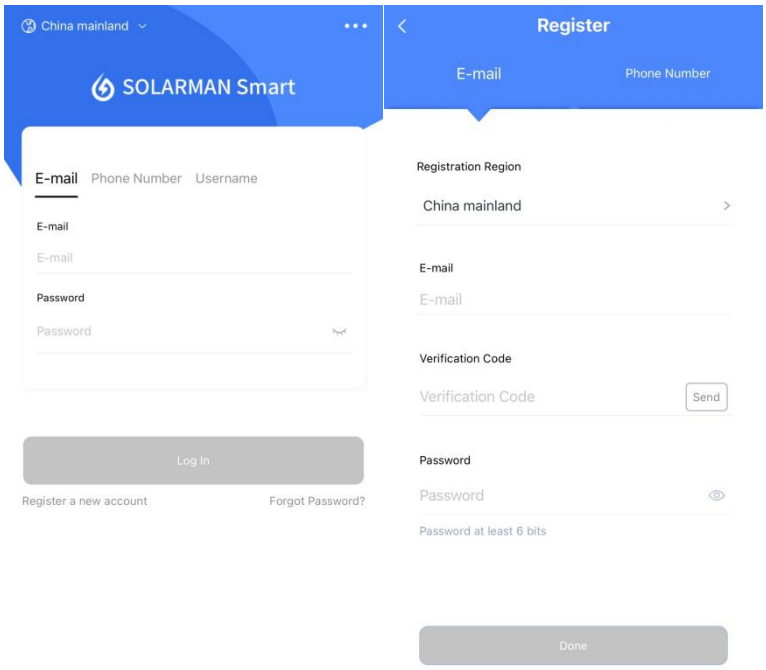

7.6 Create a Plant

Click "Add Now" to create your solar installation.

Please provide the necessary information about your solar plant, including basic details and any additional relevant information.

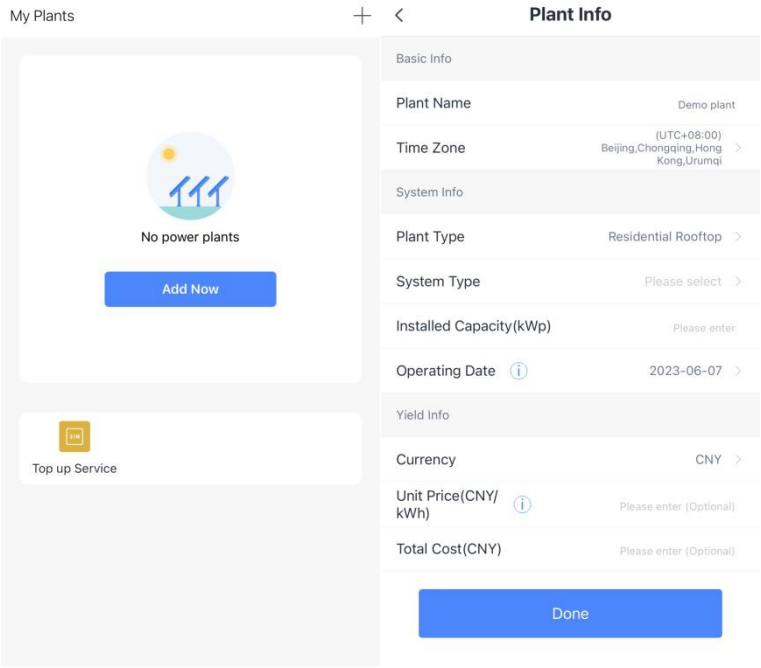

7.7 Add a Logger

step 1 Manually enter the serial number (SN) of the logger.

step 2 Click on the icon located on the right side and scan the barcode to enter the logger serial number.

You can locate the logger serial number on the external packaging or on the body of the logger itself.

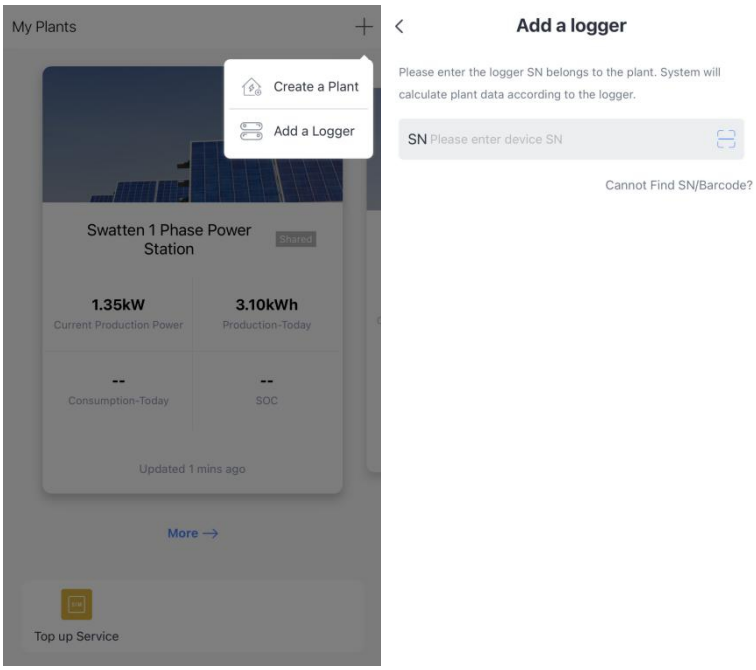

7.8 Network Configuration

Step 1: Click on "Go to Configure" to access the network settings.

(Ensure that Bluetooth and WiFi are turned ON.)

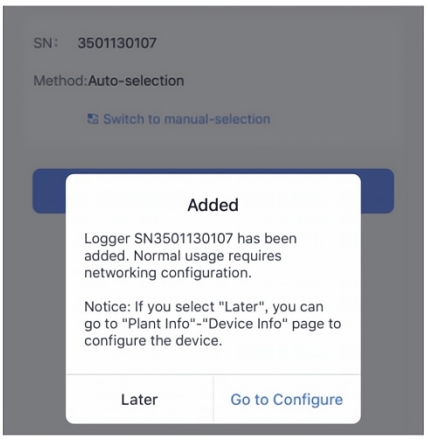

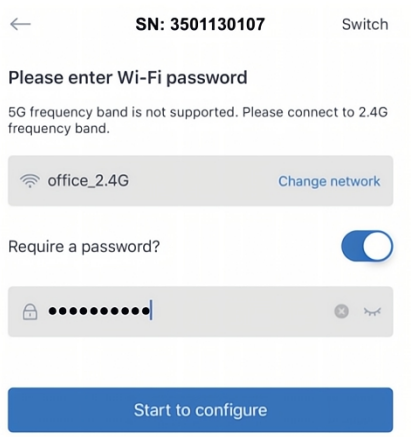

Step 2: Please wait for a few minutes. Afterward, click on "Done" to complete the setup and view the plant data.

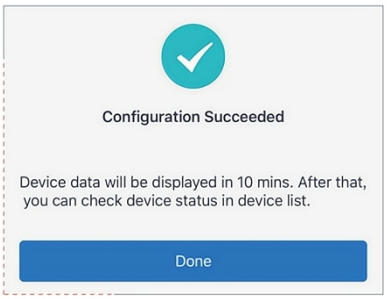

Notice
5G WiFi is not supported.

If the configuration process fails, please check the following reasons and attempt the setup again:

(1) Ensure that WLAN (Wireless Local Area Network) is turned on.

(2) Verify that your WiFi connection is functioning properly.

(3) Confirm that the wireless router does not have any restrictions in place, such as a white-black list.

(4) Remove any special characters from the Wi-Fi network name (SSID) or password.

(5) Reduce the distance between your phone and the device during the configuration process.

(6) Try connecting to a different Wi-Fi network if available.

Warning: Before leaving the site, it is crucial to ensure that the stick logger is functioning correctly. If you notice any abnormal behavior or issues, please refrain from leaving the site and immediately contact customer service. You can reach customer service at the following number: 400-181-0512

7.9 Logger Status

7.9.1 Check Indicator light

Lights	Implication	Status Description (All lights are single green lights.)
NET	Communication with router	1. Light off: Connection to the router failed. 2. On 1s/Off 1s (Slow flash): Connection to the router succeeded. 3. Light keeps on: Connection to the server succeeded. 4. On 100ms/Off 100ms (Fast flash): Distributing network fast.
COM	Communication with inverter	1. Light keeps on: Logger connected to the inverter. 2. Light off: Connection to the inverter failed. 3. On 1s/Off 1s (Slow flash): Communicating with inverter.
READY	Logger running status	1. Light off: Running abnormally. 2. On 1s/Off 1s (Slow flash): Running normally. 3. On 100ms/Off 100ms (Fast flash): Restore factory settings.

When the router is connected to the network normally, the stick logger should exhibit the following normal operation status:

1. Connection to the server succeeded: The NET light will remain illuminated after the logger is powered on.
2. Logger running normally: The READY light will flash intermittently.
3. Connection to the inverter succeeded: The COM light will remain illuminated..

7.10 Abnormal State Processing

If you encounter abnormal data on the platform while the stick logger is running, please refer to the following table and use the status of the indicator lights to perform basic troubleshooting. If the issue persists or if the indicator lights' status is not listed in the table, please contact Customer Support for assistance.

(Note: Use the table below after the stick logger has been powered on for at least 2 minutes.)

NET	COM	READY	Fault Description	Fault Cause	Solution
Any state	OFF	Slow flash	Communicate with inverter abnormally	1. Connection between stick logger and inverter loosen. 2. Inverter does not match with stick logger's communication rate	1. Check the connection between stick logger and inverter. Remove the stick logger and install again. 2. Check inverter's communication rate to see if it matches with stick logger's. 3. Long press Reset button for 5s, reboot stick logger.
OFF	ON	Slow flash	Connection between logger and router abnormal	1. Stick logger does not have a network. 2. Router WiFi signal strength weak.	1. Check if the wireless network configured. 2. Enhance router WiFi signal Strength.
Slow flash	ON	Slow flash	Connection between logger and router normal, connection between logger and	1. Router networking abnormal. 2. The server point of logger is modified.	1. Check if the router has access to the network. 2. Check the router's setting, if the connection is limited.

			remote server abnormal	3. Network limitation, server cannot be connected.	3. Contact our customer service.
OFF	OFF	OFF	Power supply abnormal	1. Connection between stick logger and inverter lossen or abnormal. 2. Inverter power insufficient. 3. Stick Logger abnormal.	1. Check the connection, remove the stick logger and install again. 2. Check inverter output power. 3. Contact our customer service.
Fast flash	Any state	Any state	Networking status	Normal	1. Exit automatically after 2mins. 2. Long press Reset button for 5s, reboot stick logger. 3. Long press Reset button for 10s, restore factory settings.
Any state	Any state	Fast flash	Restore factory settings	Normal	1. Exit automatically after 1mins. 2. Long press Reset button for 5s, reboot stick logger. 3. Long press Reset button for 10s, restore factory settings.

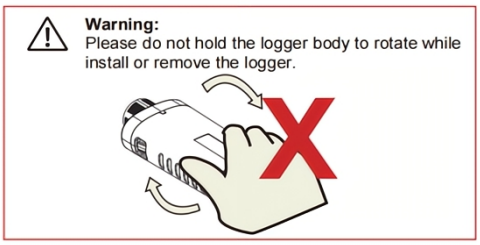

8 System Decommissioning

8.1 Disconnecting the Inverter

8.1.1 Disconnecting the Inverter

CAUTION

To ensure safety and prevent the risk of burns, it is important to follow proper procedures when operating or performing maintenance on the inverter. Please adhere to the following steps to disconnect the inverter from the AC and DC power sources:

Step 1: Disconnect the external AC circuit breaker that supplies power to the inverter. Make sure to secure it against accidental reconnection.

Step 2: Rotate the DC switch to the "OFF" position to disconnect all PV string inputs from the inverter.

Step 3: Wait for approximately 10 minutes to allow the capacitors inside the inverter to completely discharge. This step is crucial to ensure that no residual electrical charge remains.

Step 4: Use a current clamp to verify that the DC cable is free from any electrical current. This is an important safety measure to prevent any potential shocks or hazards.

Please remember to wear protective gloves when operating the inverter, even after it has been shut down and allowed to cool down. In addition, always follow safety guidelines and refer to the manufacturer's instructions for specific procedures and precautions related to maintenance and service work on the inverter.

--End

8.1.2 Dismantling the Inverter

CAUTION

Risk of burn injuries and electric shock!

Do not come into contact with any internal live components until at least 10 minutes have elapsed after disconnecting the inverter from the utility grid and PV input.

Before disassembling the inverter, ensure that both AC and DC connections are disconnected.

Step 1: Disconnect all cables from the inverter in reverse order as described in the "Electrical Connection" section.

Step 2: Disassemble the inverter following the reverse steps outlined in the "Mechanical Mounting" section.

Step 3: If needed, remove the wall-mounting bracket from the wall.

Step 4: If the inverter will be stored for future use, please refer to the "Inverter Storage" section for proper conservation guidelines.

--End

8.1.3 Disposal of the Inverter

Users are solely responsible for the proper disposal of the inverter.

WARNING

Please ensure that the inverter is disposed of in accordance with the relevant local regulations and standards to

prevent any property losses or casualties.

NOTICE

Certain components of the inverter may pose a risk of environmental pollution. Please adhere to the disposal regulations for electronic waste that are applicable at your installation site when disposing of these components.

8.2 Decommissioning the Battery

To decommission a Li-ion battery after the inverter has been decommissioned, follow these steps:

Step 1: Disconnect the DC circuit breaker located between the battery and the inverter.

Step 2: Disconnect the communication cable that connects the battery to the inverter.

Step 3: Wait for approximately 1 minute to allow for any residual voltage to dissipate. Then, use a multimeter to measure the voltage at the battery ports.

Step 4: If the battery port voltage is zero, proceed to disconnect the power cables from the battery module.

Note: It is important to exercise caution and follow proper safety procedures when handling and decommissioning batteries.

--End

Swatten does not assume liability for the disposal of the battery. The responsibility for proper battery disposal rests with the user. Please ensure that the battery is disposed of in accordance with applicable local regulations and standards to avoid any property damage or harm.

9 Troubleshooting and Maintenance

9.1 Troubleshooting

Note:
Please consult the charger user manual for information regarding the fault codes of the charger. The manual will provide detailed explanations of the fault codes and their corresponding troubleshooting steps.

When an alarm is triggered, you can view the alarm information through the dedicated App. Here are the Alarm ID codes and their respective corrective measures:

Alarm ID	Alarm Name	Corrective Measure
112 100 101 102	Grid Overvoltage Grid Undervoltage	1. Measure the actual grid voltage. If the grid voltage is higher than the set value, please contact the local power company for a solution. 2. Check the protection parameters through the SOLARMAN Smart App. With approval from the local power operator, modify the voltage protection value. 3. Verify the secure connection of the Grid port wiring. 4. If the fault still persists, please contact Swatten."
106 107	Grid Overfrequency Grid Underfrequency	1. Measure the actual grid frequency. If the grid frequency is higher than the set value, please contact the local power company for a solution. 2. Check the protection parameters through the SOLARMAN Smart App. With approval from the local power operator, modify the frequency protection value. 3. Verify the secure connection of the Grid port wiring. 4. If the fault still persists, please contact Swatten.
1 108 109 111 116 123 200 201 205 206 216 218 227 300 301 305 312	System Fault	1. Wait for the inverter to recover normal operation. 2. Disconnect the AC and DC switches, and if there is a battery, disconnect the battery-side switch. After 10 minutes, turn off the AC and DC switches in rotation and restart the system. 3. If the fault still persists, please contact Swatten.

316 320 400 401 403 404 479 481 502 505 507 512 700 701 702 703 818 819 820 821 822 825 829	System Fault	1. Wait for the inverter to recover normal operation. 2. Disconnect the AC and DC switches, and if there is a battery, disconnect the battery-side switch. After 10 minutes, turn off the AC and DC switches in rotation and restart the system. 3. If the fault still persists, please contact Swatten.
110	Leakage Current Fault	1. This alarm may be caused by insufficient sunlight or a humid environment. Once the environment improves, the inverter will reconnect to the grid. 2. If the environment is normal, check if the AC and DC cables are well-insulated. 3. If the alarm continues to exist, please contact Swatten.
122	Ground Fault	1. Check if the AC cable is connected correctly. 2. Check the insulation between the grounding cable and live wires. 3. If the fault still persists, please contact Swatten."
129	EPS Load Overload	1. Reduce the power of loads connected to the Off-grid port or remove some loads. 2. If the alarm continues to exist, please contact Swatten.
209 210	Photovoltaic Reverse Connection Fault	1. Check if the corresponding PV string is connected in reverse polarity. If it is, disconnect the DC switch and adjust the polarity when the string current is below 0.5 A. 2. If the fault still persists, please contact Swatten. *Code 209 corresponds to PV1, and 210 corresponds to PV2 and PV3.
501	Environmental Overtemperature	Typically, the inverter will resume operation when the internal or module temperature returns to normal. If the fault still persists: Check if the inverter's ambient temperature is too high. Check if the inverter is placed in a well-ventilated area.

		Check if the inverter is exposed to direct sunlight. If so, avoid direct sunlight. Check if the fan is operating properly. If not, replace the fan. If the fault still persists, please contact Swatten.
503	Insulation Fault	Wait for the inverter to recover normal operation. If the fault repeatedly occurs: Check if the ISO resistance protection value is set too high and ensure compliance with local regulations, with approval from the local power operator. Check the grounding resistance of the ground and DC cables. Take corrective measures if there is a short circuit or insulation layer damage. If the cables are functioning correctly and the fault occurs during rainy weather, recheck when the weather improves. If there is a battery, check if the battery cables are damaged and if the terminal connections are loose or poor. If so, replace the damaged cables and secure the terminals to ensure reliable connections. If the fault still persists, please contact Swatten.
516 528 529 530 531	Off-grid Abnormality	1. Confirm if the off-grid is overloaded. If it is, reduce the load to below 50%. If the fault still persists, 2. If the alarm continues to exist, please contact Swatten.
603 611 612 615 616	Battery Abnormality	1. If the battery voltage is abnormal, check for any abnormalities in the battery power cable connections, such as reverse connection or looseness. If found, please correct the battery power cable connection. 2. When the battery power line is correctly connected, check if the real-time battery voltage is abnormal. If so, please contact the battery manufacturer. If not, please contact Swatten. 3. If the fault still persists, please contact the battery manufacturer.
805	Parallel Communication Abnormality	1. Check if the communication line for parallel operation is abnormal, including wiring errors or loose connections. 2. Check if the parallel operation settings are correct. 3. If the fault still persists, please contact Swatten.
830	Meter Communication Abnormality	1. Check if the communication line for the energy meter is abnormal, including wiring errors or loose connections. 2. Check if the grid voltage is normal. 3. If the fault still persists, please contact Swatten.
831	BMS Communication Abnormality	1. Check if the communication line for the BMS (Battery Management System) is abnormal, including wiring errors or loose connections. 2. Check if the battery voltage is normal. If abnormal, please contact the battery manufacturer. If not, continue to check if the BMS has issued any alarms. If there are alarms, please contact the battery manufacturer. If there are no alarms, please contact Swatten. 3. If the fault still persists, please contact Swatten.

		Please perform the appropriate checks and maintenance procedures based on the specific situation, and if necessary, contact the relevant manufacturers or Swatten for further support and solutions.

Note:
If you have implemented the suggested troubleshooting steps and the issue persists, please get in touch with the distributor. In the event that the distributor is unable to resolve the problem, contact Swatten directly for further assistance.

9.2 Maintenance

9.2.1 Maintenance Notices

The DC switch can be locked in the OFF position or a position beyond OFF to ensure safety (applicable to "AU" and "NZ" countries).

DANGER

There is a risk of inverter damage or personal injury due to incorrect service.

- Always use special insulation tools when performing high-voltage operations to ensure safety.
- Before starting any service work, disconnect the AC circuit breaker on the grid side and check the inverter status. If the inverter indicator is off, it is recommended to wait until nighttime before disconnecting the DC switch. If the inverter indicator is on, you can directly disconnect the DC switch.
- After the inverter has been powered off for at least 10 minutes, use professional instruments to measure the voltage and current. Only when there is no voltage or current present, and when operators are wearing appropriate protective equipment, should they proceed with operating and maintaining the inverter.
- Even when the inverter is shut down, it may still retain heat and cause burns. Always wear protective gloves when handling the inverter after it has cooled down.

CAUTION

To prevent misuse or accidents caused by unauthorized individuals: Display noticeable caution signs or mark safety warning zones around the inverter to avoid accidents resulting from improper handling.

NOTICE

Restart the inverter only after resolving any faults that compromise its safety performance. Since the inverter does not have serviceable components, never open the enclosure or attempt to replace any internal parts. To mitigate the risk of electric shock, refrain from performing any maintenance tasks beyond those outlined in this manual. If needed, reach out to your distributor for assistance. If the issue persists, contact Swatten. Failure to follow these guidelines may result in warranty voidance and associated losses.

NOTICE

Handling the PCB (Printed Circuit Board) or other components sensitive to static electricity can lead to device damage.

- Avoid unnecessary contact with the circuit board.
- Adhere to regulations for protecting against electrostatic discharge and use an anti-static wrist strap..

9.2.2 Routine Maintenance

Item	Method	Period
System clean	Check the temperature and dust of the inverter. Clean the inverter enclosure if necessary.	Six months to a year (depending on the dust con-Tents in air)
Electrical connection	Check whether all cable are firmly connected in place. Check whether there is damage to the cables, especially the surface in contact with metal.	6 months after commissioning And then once or twice a year.
General status of the system	- Visual check for any damage or deformation of the inverter. - Check any abnormal noise during the operation. - Check each operation parameter. Be sure that nothing covers the heat sink of the inverter.	Every 6 months

10 Appendix

10.1 Technical Data

Type designation	SiH-5kW-TH	SiH-6kW-TH
PV Input		
Recommended max. PV input power	7500 Wp	9000 Wp
Max. PV input voltage	1000V	
Startup input voltage	180	250V
Rated PV input voltage	600V	600V
MPP voltage range	150-950V	200-950V
No. of independent MPP inputs	2	2
Default No. of PV strings per MPPT	1\1	1\1
Max. PV input current	32A(16A/16A)	32A(16A/16A)
Max. Short-circuit current of PV input	40A(20A/20A)	40A(20A/20A)
AC Input and Output		
Max. AC input power from grid	12500 VA	15000 VA
Rated AC output power	5000 W	6000 W
Max. AC output apparent power	5500 VA	6600 VA
Rated AC output current	7.6 A	9.1 A
Max. AC output current	8.4A	10A
Rated AC voltage	3/N/PE 220V/380V 230V/400V 240V/415V	
AC voltage range	270V-480V	
Rated grid frequency	50Hz/60Hz	
Grid frequency range	45~55Hz/55~65Hz	
Harmonic (THD)at rated burden	< 3%	
Power factor at Rated power	> 0.99	
Adjustable power factor	0.8 leading to 0.8 lagging	
Grid Type	Three phase	
Efficiency		
Max. efficiency	98.00%	98.20%
European efficiency	97.20%	97.50%
Protection & Function		
LVRT	**Yes**	**Yes**
Grid monitoring	Yes	Yes
DC reverse polarity protection	Yes	Yes
AC short-circuit protection	Yes	Yes
Leakage current protection	Yes	Yes
Surge Protection	Type II	Type II
DC switch (PV)	Yes	Yes

DC fuse (Battery)	Yes	Yes
Battery input reverse polarity protection	Yes	Yes
Battery Data		
Battery type	Li-ion	
Battery voltage	150-600V	
Max. charge current	30 A	
Max. discharge current	30 A	
Max. charge power	7500 W	9000 W
Max. discharge power	6000 W	7200 W
Mechanical and environment-related parameters		
Dimensions (W*H*D)	450*550*185mm	
Weight	31KG	
Mounting method	Wall-mounting bracket	Wall-mounting bracket
Topology (Solar /battery)	Transformerless / Transformerless	Transformerless / Transformerless
Degree of protection	IP65	IP65
Operating ambient temperature range	-25℃~60℃,No derating below 45 ℃	-25℃~60℃,No derating below 45 ℃
Allowable relative humidity range	0~100%	0~100%
Cooling method	Natural convection	Natural convection
Max. operating altitude	4000m	4000m
Display	LED	LED
Communication	RS485/CAN/WLAN	RS485/CAN/WLAN
DI/DO	DI×1/DO×1/DRM	DI×1/DO×1/DRM
DC connection type	MC4	MC4
Battery connection type	MC4	MC4
AC connection type	Plug and play connector	Plug and play connector
EPS Data (off-grid mode)		
Rated voltage	220V/230V/240V(±2%)	
Frequency range	50Hz/60Hz(±0.5%)	
Total output THDV for liner load	≤2%	
Switch time to emergency mode	≤10 ms	
Rated output power	5000 W /5000 VA	6000 W /6000 VA
Peak output power	6000VA 5min/10000 VA,10s	7200VA 5min/10000 VA,10s

Type designation	SiH-8kW-TH	SiH-10kW-TH
PV Input		
Recommended max. PV input power	12000 Wp	15000 Wp
Max. PV input voltage	1000V	
Startup input voltage	250V	250V

Rated PV input voltage	600V	600V
MPP voltage range	200-950V	200-950V
No. of independent MPP inputs	2	2
Default No. of PV strings per MPPT	1\1	1\2
Max. PV input current	32A(16A/16A)	48A(16A/32A)
Max. Short-circuit current of PV input	40A(20A/20A)	60A(20A/40A)
AC Input and Output		
Max. AC input power from grid	18600 VA	20600 VA
Rated AC output power	8000 W	10000 W
Max. AC output apparent power	8800 VA	11000 VA
Rated AC output current	12.1A	15.2 A
Max. AC output current	13.3 A	16.7A
Rated AC voltage	3/N/PE 220V/380V 230V/400V 240V/415V	
AC voltage range	270V-480V	
Rated grid frequency	50Hz/60Hz	
Grid frequency range	45~55Hz/55~65Hz	
Harmonic (THD)at rated burden	< 3%	
Power factor at Rated power	> 0.99	
Adjustable power factor	0.8 leading to 0.8 lagging	
Grid Type	Three phase	
Efficiency		
Max. efficiency	98.40%	98.40%
European efficiency	97.90%	97.90%
Protection & Function		
LVRT	**Yes**	**Yes**
Grid monitoring	Yes	Yes
DC reverse polarity protection	Yes	Yes
AC short-circuit protection	Yes	Yes
Leakage current protection	Yes	Yes
Surge Protection	Type II	Type II
DC switch (PV)	Yes	Yes
DC fuse (Battery)	Yes	Yes
Battery input reverse polarity protection	Yes	Yes
Battery Data		
Battery type	Li-ion	
Battery voltage	150-600V	
Max. charge current	30 A	
Max. discharge current	30 A	
Max. charge power	10600 W	10600 W
Max. discharge power	10600 W	10600 W

Mechanical and environment-related parameters		
Dimensions (W*H*D)	450*550*185mm	
Weight	31KG	
Mounting method	Wall-mounting bracket	Wall-mounting bracket
Topology (Solar/battery)	Transformerless / Transformerless	Transformerless / Transformerless
Degree of protection	IP65	IP65
Operating ambient temperature range	-25℃~60℃,No derating below 45 ℃	-25℃~60℃,No derating below 45 ℃
Allowable relative humidity range	0~100%	0~100%
Cooling method	Natural convection	Natural convection
Max. operating altitude	4000m	4000m
Display	LED	LED
Communication	RS485/CAN/WLAN	RS485/CAN/WLAN
DI/DO	DI×1/DO×1/DRM	DI×1/DO×1/DRM
DC connection type	MC4	MC4
Battery connection type	MC4	MC4
AC connection type	Plug and play connector	Plug and play connector
EPS Data (off-grid mode)		
Rated voltage	220V/230V/240V(±2%)	
Frequency range	50Hz/60Hz(±0.5%)	
Total output THDV for liner load	≤2%	
Switch time to emergency mode	≤10 ms	
Rated output power	8000 W /8000 VA	10000 W /10000 VA
Peak output power	9600 VA,5min	12000 VA,5min